SUBCOURSE
EN5110

EDITION
A

PREPARE A PLUMBING TAKEOFF LIST (PLUMBING I)

AIPD

READINESS/
PROFESSIONALISM

THRU
GROWTH

THE ARMY INSTITUTE FOR PROFESSIONAL DEVELOPMENT

ARMY CORRESPONDENCE COURSE PROGRAM

PREPARE A PLUMBING TAKEOFF LIST

SUBCOURSE EN 5110

PLUMBER

MOS 51K 1 and 2

US Army Engineer School
Fort Leonard Wood, Missouri

12 Credit Hours

GENERAL

The plumbing takeoff list subcourse, part of the Plumber, MOS 51K, Skill Levels 1 and 2, course, is designed to teach the knowledge necessary to extract information from a construction drawing legend, identify plumbing symbols, and use plumbing material. The subcourse is presented in two lessons, each lesson corresponding to a terminal objective as indicated below.

Lesson 1: USE DRAWING LEGENDS AND PLUMBING SYMBOLS

OBJECTIVE: Describe the methods used to extract information from a construction drawing legend and to identify plumbing symbols.

TASK: 051-248-1001, Prepare a plumbing takeoff list.

CONDITIONS: Given subcourse booklet EN 5110 and an examination response sheet. You will work in your own environment without supervision.

STANDARDS: You should be able to complete this lesson and answer the practice exercises within approximately 4 hours.

Lesson 2: LIST PLUMBING MATERIALS

OBJECTIVE: List plumbing materials by type, size, and length from a construction drawing.

TASK: 051-248-1001, Prepare a plumbing takeoff list.

CONDITIONS: Given subcourse booklet EN5110 and an examination response sheet. You will work in your own environment without supervision.

TABLE OF CONTENTS

Page

GENERAL i
ADMINISTRATIVE INSTRUCTIONS v
GRADING AND CERTIFICATION INSTRUCTIONS v
INTRODUCTION vi

Lesson 1: USE DRAWING LEGENDS AND PLUMBING SYMBOLS 1

Learning Event 1: Read a Construction Drawing 1
Learning Event 2: Identify Water System Pipelines 4
Learning Event 3: Identify Fixture Symbols 14
Learning Event 4: Identify Waste System Pipelines 20
Review Exercise 31
Review Exercise Solutions 38

Lesson 2: LIST PLUMBING MATERIALS

Learning Event 1: Measure Pipe Run Lengths 39
Learning Event 2: List Water and Waste Line Fittings 53
Review Exercise 66
Review Exercise Solutions 76

STUDENT INQUIRY SHEET (ADMINISTRATIVE) ..... Following Examination

STUDENT INQUIRY SHEET (SUBCOURSE CONTENT) ..... Following Examination

THIS PAGE INTENTIONALLY LEFT BLANK

INTRODUCTION

An important part of building construction is the ability to read and understand the information shown on a construction drawing or a set of construction drawings. The drawings show what plumbing facilities are required by using symbols and abbreviations to identify the real material items. The symbols and abbreviations on the construction drawing tell the plumber the location of water and waste pipelines, the type and size of pipe, the type of fittings for pipeline connections, and the location of all the fixtures required.

Once you can read and understand the information on a construction drawing, you can determine the lengths of pipe required by type and size, the number of different types of fittings by size, and the number of different types of fixtures. You will be able to make a list of plumbing materials needed to install any part of or all of the plumbing system.

Lesson 1
USE DRAWING LEGENDS AND PLUMBING SYMBOLS

OBJECTIVE
At the end of this lesson, you will be able to describe the methods used to extract information from a construction drawing legend and to identify plumbing symbols.

TASK
Task 051-248-1001, Prepare a plumbing takeoff list.

CONDITIONS
Given subcourse booklet EN5110 and an examination response sheet. You will work in your own environment without supervision.

STANDARDS
You should be able to complete this lesson and answer the review exercise within approximately 4 hours. You must respond correctly to 70 percent of the examination questions pertaining to this lesson.

CREDIT HOURS
4.

REFERENCES
TM 5-551K, TM 5-704, FM 5-51K.

Learning Event 1
READ A CONSTRUCTION DRAWING

1. A plumber has to read and understand the information on a construction drawing. The drawing has two areas, the legend and the diagram. The legend contains general information and the scale of the drawing. The diagram contains plumbing symbols giving the location of the plumbing system in a building.

    a. General information is in the legend of a construction drawing. "Schedule of Drawings," part of a legend in figure 1-1 on page 2, identifies all the drawings by number, number of sheets per drawing, and title of each drawing. "General Notes," also part of a legend in figure 1-1, gives additional information that is needed. Items 3, 4, and 5 are for the plumber. Note: The legend of a construction drawing is in the lower right hand corner.

FIGURE 1-1. INFORMATION IN A LEGEND

GENERAL NOTES

1. REFER TO TM5-303 FOR BUILDING SHELL REQUIREMENTS
2. FOR FSN BILL OF MATERIALS - REFER TO TM5-303 BY FACILITY NUMBER
3. FOR DETAIL NO. 1, "MIXING CONTROL FOR GROUP SHOWER" & DETAIL NO. 2, "SHOWER HEAD & CONTROL VALVE," REFER TO DWG. NO. 72-35, SHEET 1 OF 1
4. —T— INDICATES TEMPERED WATER
5. INSTALL 45° Y-BRANCH WITH PLUG FOR C.O. ABOVE FLOOR WITH RISE FOR V.T.R.

SCHEDULE OF DRAWINGS

DWG. NO.	DESCRIPTION	SHEET NO.
72-32	PLANS	1 OF 1
72-35	PLUMBING DIAG & DETAILS	1 OF 1
99-98	STANDARD DETAILS	
34-03	WOOD FRAME CONST. BARRACKS TYPE BLDGS	1-7 OF 7
35-21	STEEL FRAME CONST. BARRACKS TYPE BLDGS	1-4 OF 4

b. The scale of a drawing can be either a graphic or ratio scale. In figure 1-2, each segment of the line equals one foot in the building. In figure 1-3, 1/4 inch on the drawing equals one foot in the building.

FIGURE 1-2. LEGEND, GRAPHIC SCALE

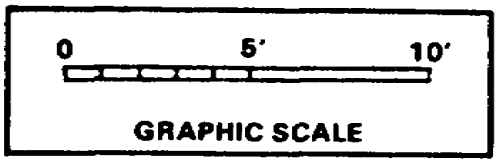

FIGURE 1-3. LEGEND, RATIO SCALE

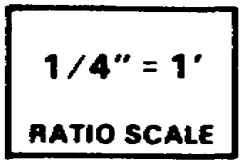

2. The diagram is the part of the drawing that uses symbols to show the location of the water system, waste system, and fixtures. See figure 1-4.

FIGURE 1-4. CONSTRUCTION DRAWING DIAGRAM

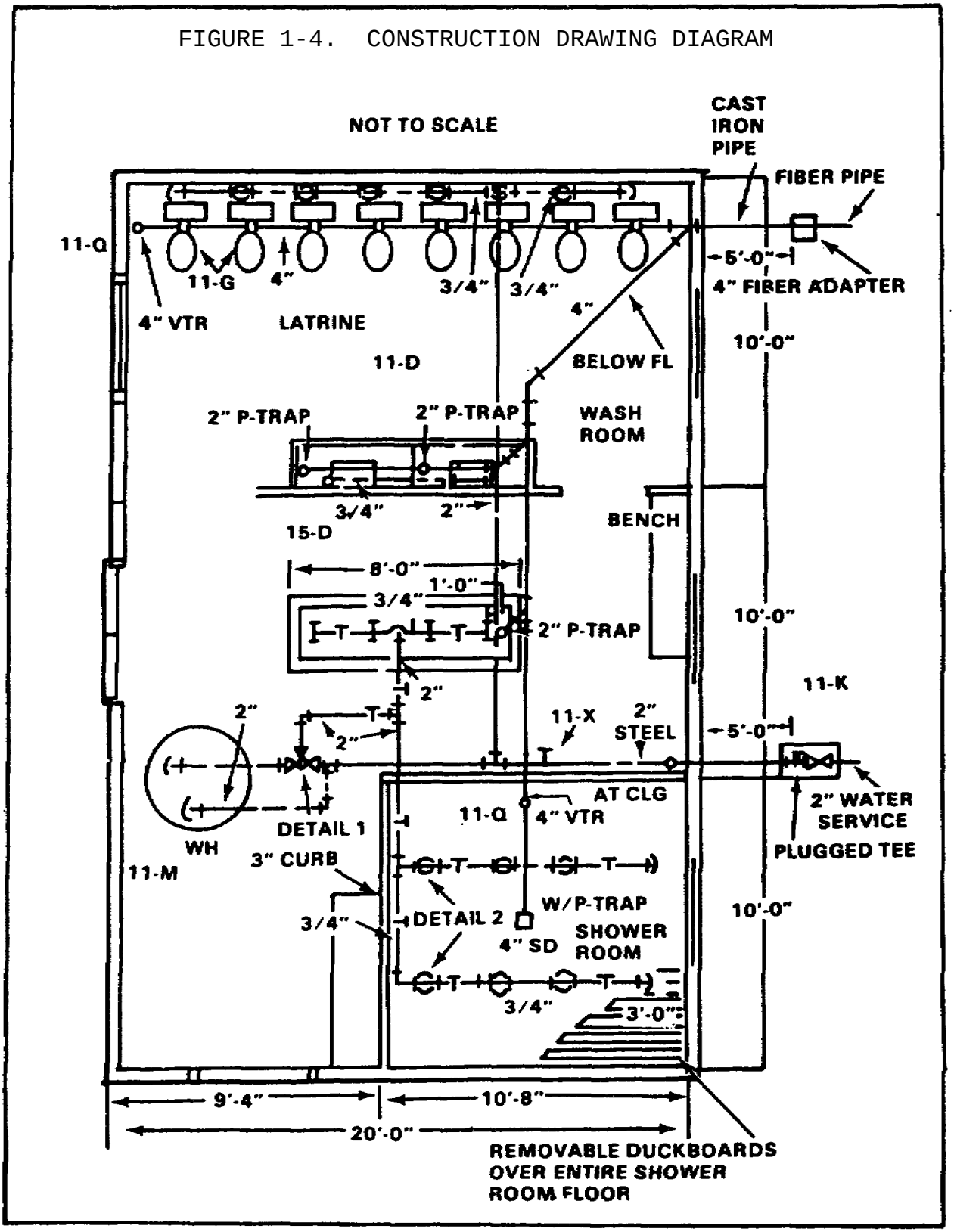

Learning Event 2
IDENTIFY WATER SYSTEM PIPELINES

3. Cold, hot, and tempered water lines are identified by symbols.

a. Figure 1-5 shows water pipeline symbols.

FIGURE 1-5. WATER PIPELINE SYMBOLS

Symbols/Abbreviations	Meaning	Illustration
	COLD WATER LINES	
	HOT WATER LINES	
-T———T-	TEMPERED WATER LINES	

b. The arrows on the diagram in figure 1-4 show the location and direction of the cold water line.

FIGURE 1-6. ARROWS SHOWING DIRECTION -- COLD WATER

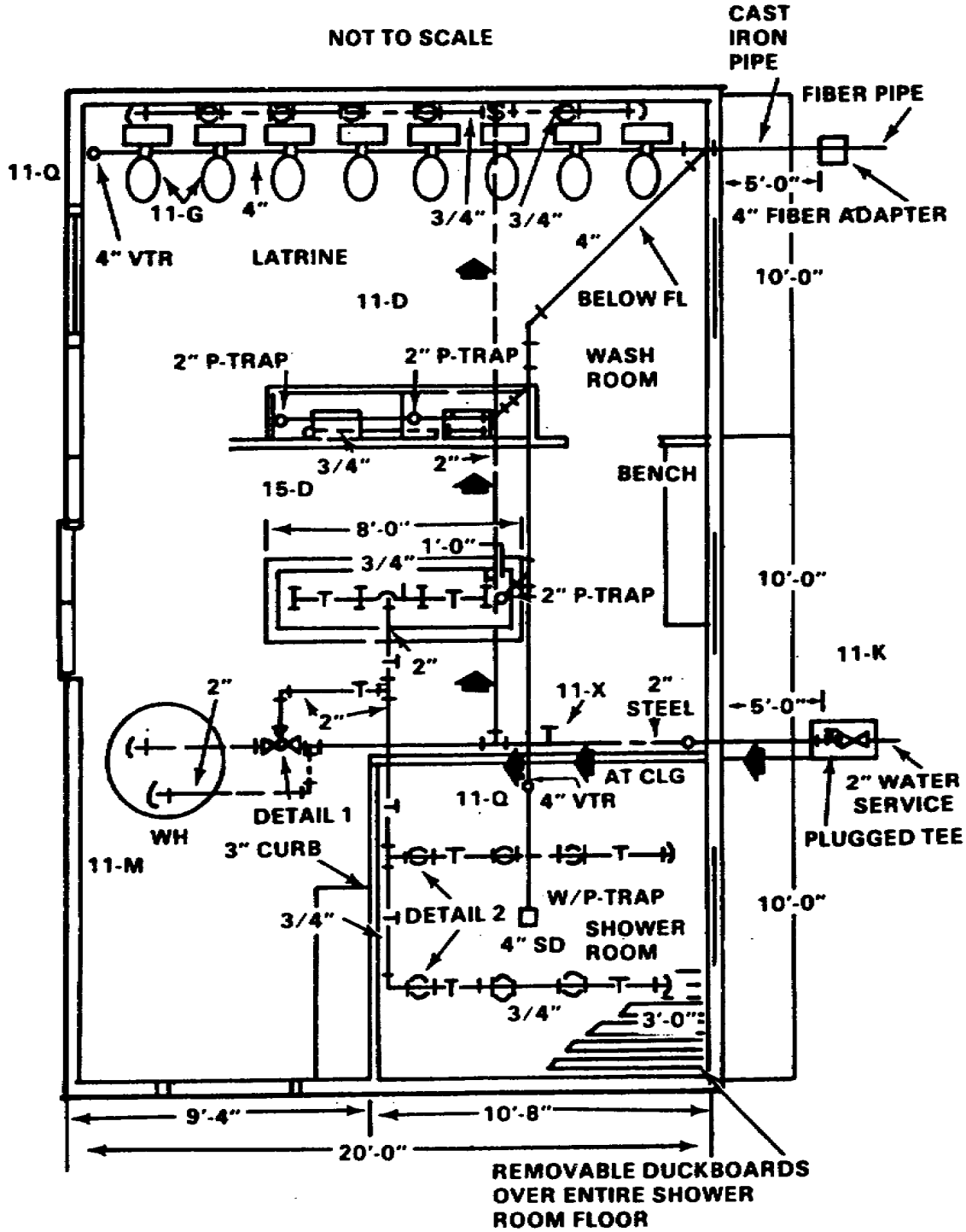

c. The arrow on the diagram in figure 1-7 shows the location and direction of the hot water line.

FIGURE 1-7. ARROW SHOWING DIRECTION-HOT WATER

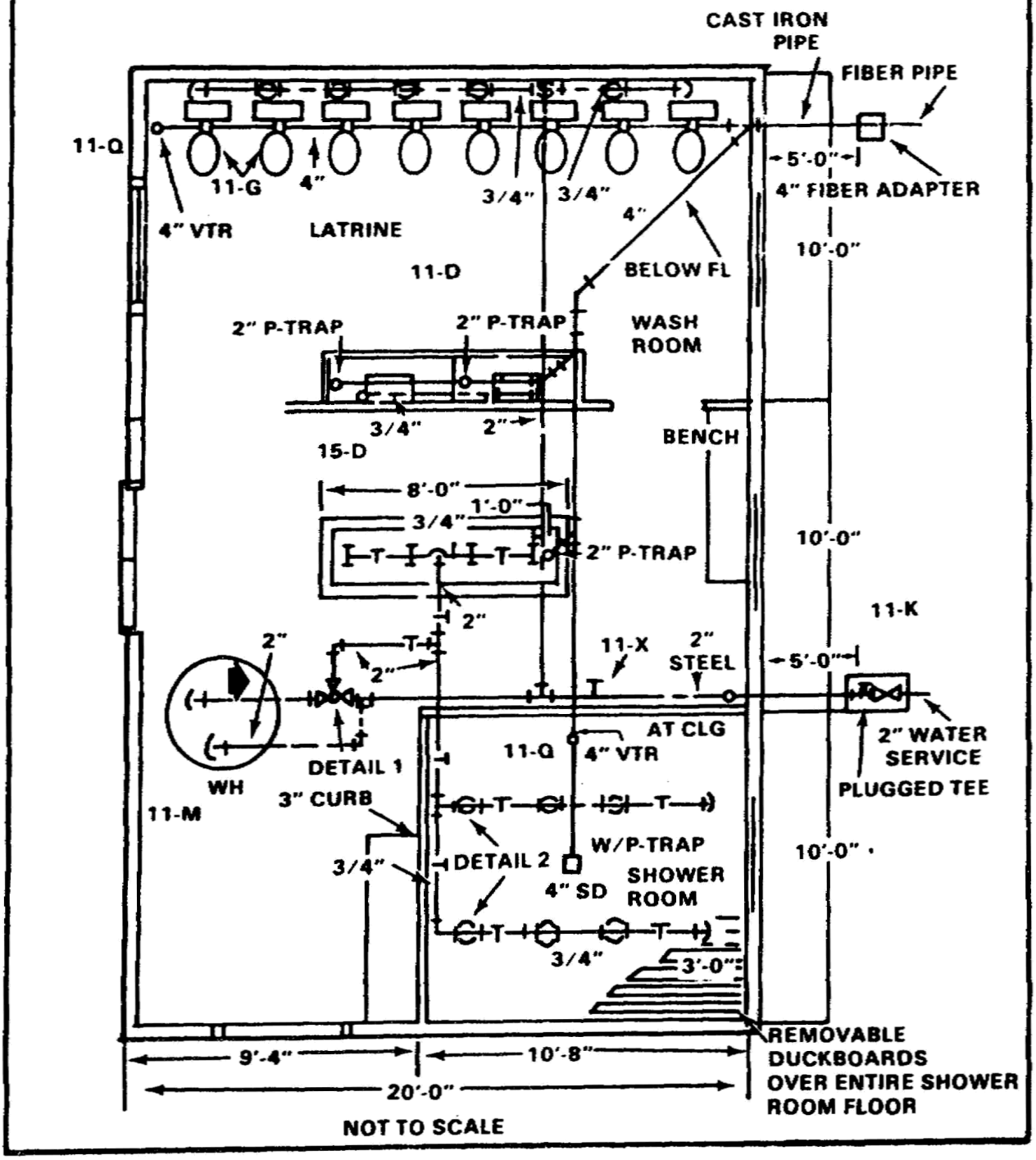

d. The arrows in the diagram in figure 1-8 show the location and direction of the tempered water line.

FIGURE 1-8. ARROWS SHOWING DIRECTION-TEMPERED WATER

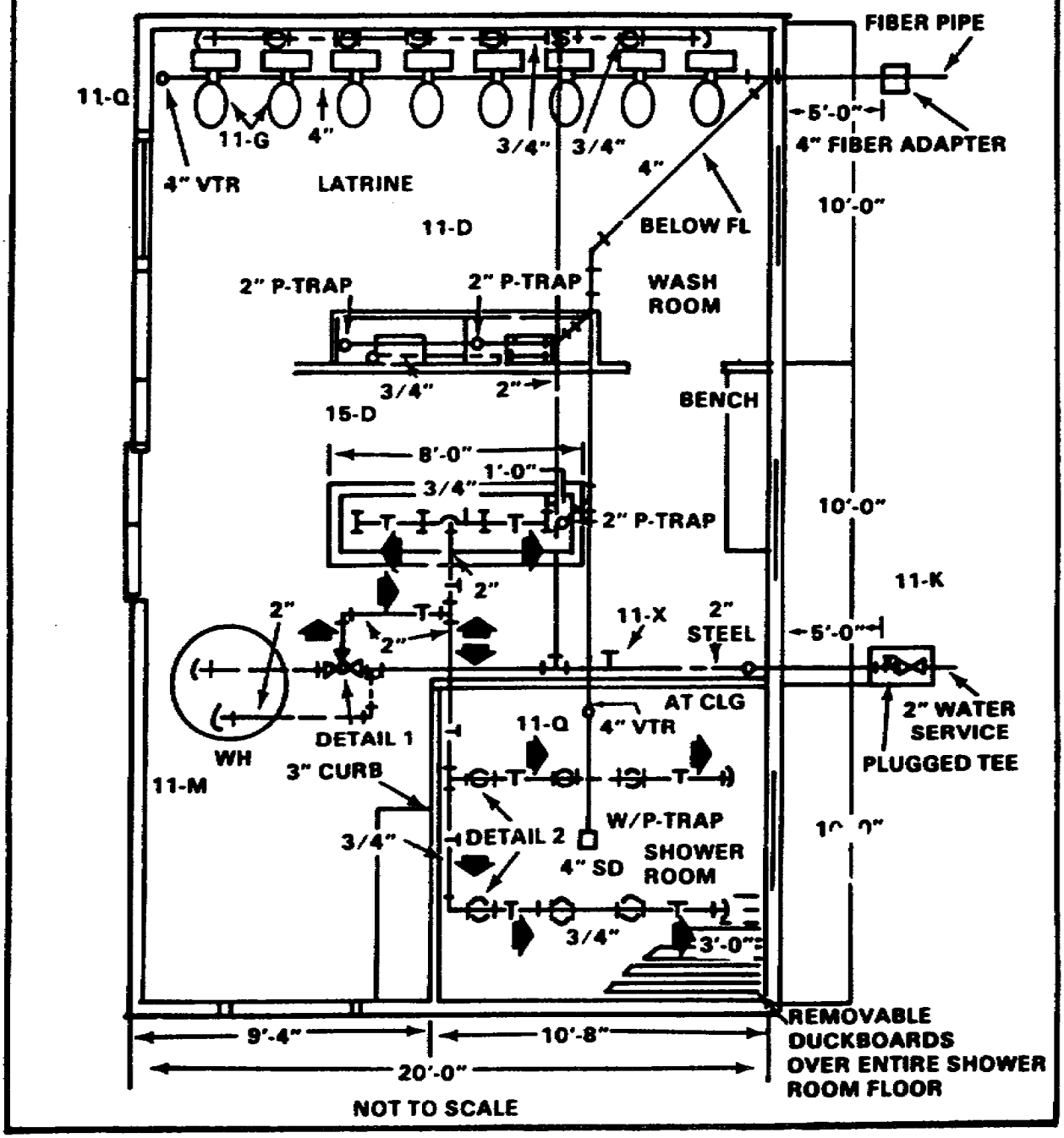

4. Fittings connect and change the directions of water line pipe runs. These fittings are identified by symbols.

a. Figure 1-9 shows water-pipe-fitting symbols.

FIGURE 1-9. WATER-PIPE-FITTING SYMBOLS

Symbols/Abbreviations	Meaning	Illustration
	ELBOW TURNED DOWN	
	ELBOW TURNED UP	
	ELBOW SIDE OUTLET UP	
	ELBOW	
	TEE	
	TEE, OUTLET DOWN	
	TEE, OUTLET UP	
	TEE, SIDE OUTLET UP	
	TEE, SIDE OUTLET DOWN	
	FLANGED	
	SCREWED	

b. Figure 1-10 shows water-pipe-fitting symbols used on a diagram.

FIGURE 1-10. DIAGRAM SHOWING TYPES OF FITTINGS

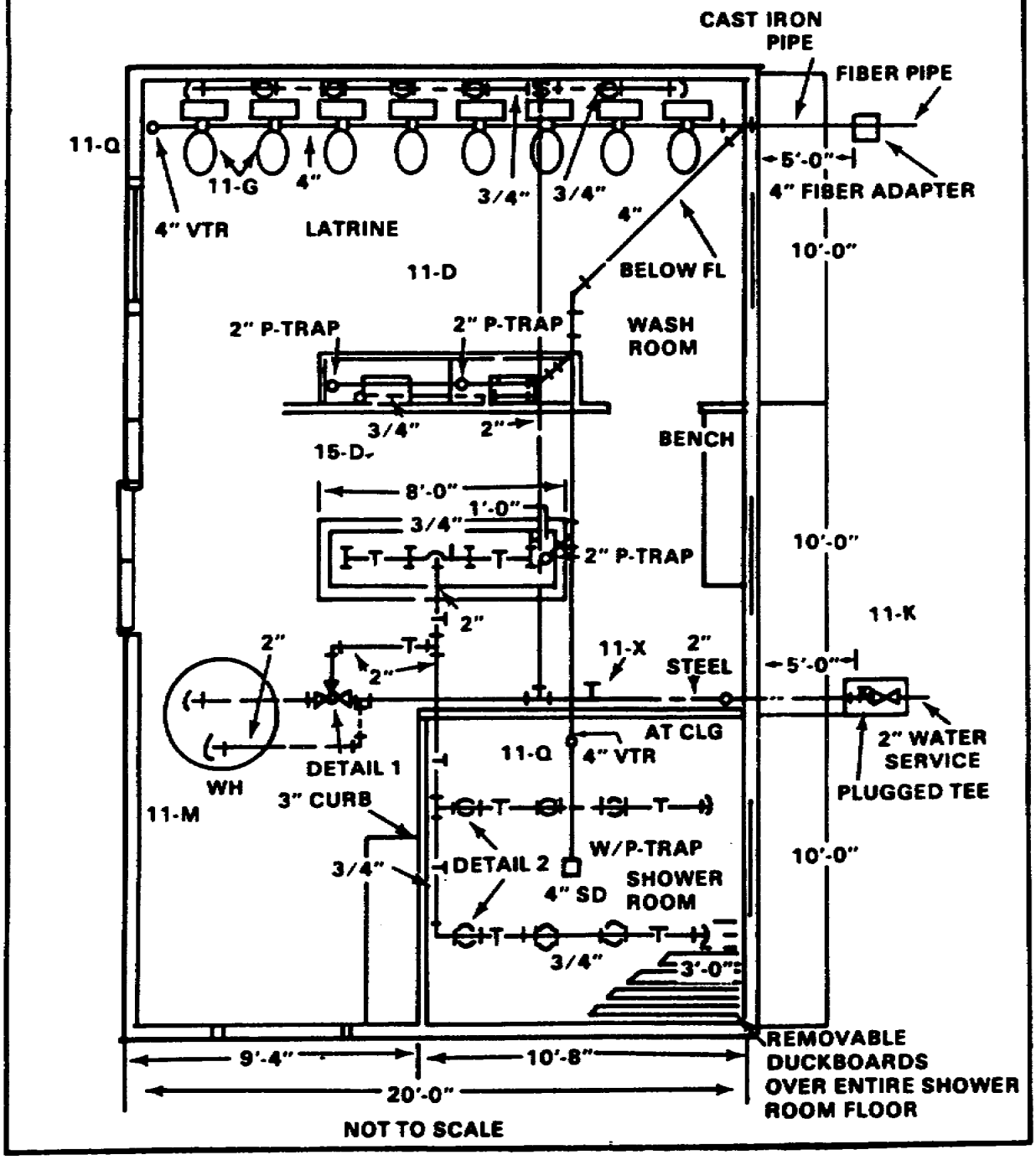

Self-Check Exercise

Match the following water-pipe-fitting symbols with their descriptions.

1.

2.

3. 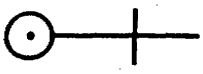

4.

A. Tee
B. Elbow turned down
C. Tee, outlet up
D. Elbow turned up

Self-Check Exercise Solutions

Did you match 1 through 4 as follows?

1. B. Elbow turned down
2. C. Tee, outlet up
3. D. Elbow turned up.
4. A. Tee

If you failed to match 1 through 4 above correctly, go back and review the water-pipe-fitting symbols before continuing the lesson. If you matched 1 through 4 above correctly, good work! Continue with the lesson.

5. Valves control the flow of water. Gate valves turn water flow on or off. Globe valves control flow of water. Faucets turn water on and off at a fixture such as lavatory or sink.

a. Figure 1-11 shows symbols used for valves.

FIGURE 1-11. VALVE SYMBOLS

Symbols/Abbreviations	Meaning	Illustration
	GATE VALVE	
	GATE VALVE ANGLED	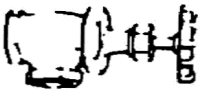
	GLOBE VALVE	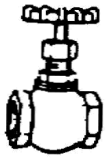
	GLOBE VALVE ANGLED	
PB	FAUCET, PLAIN BIBB	
HB	FAUCET, HOSE BIBB	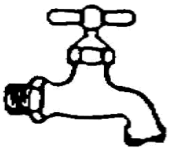

b. Figure 1-12 shows valve symbols used on a diagram.

FIGURE 1-12. DIAGRAM SHOWING TYPES OF VALVES

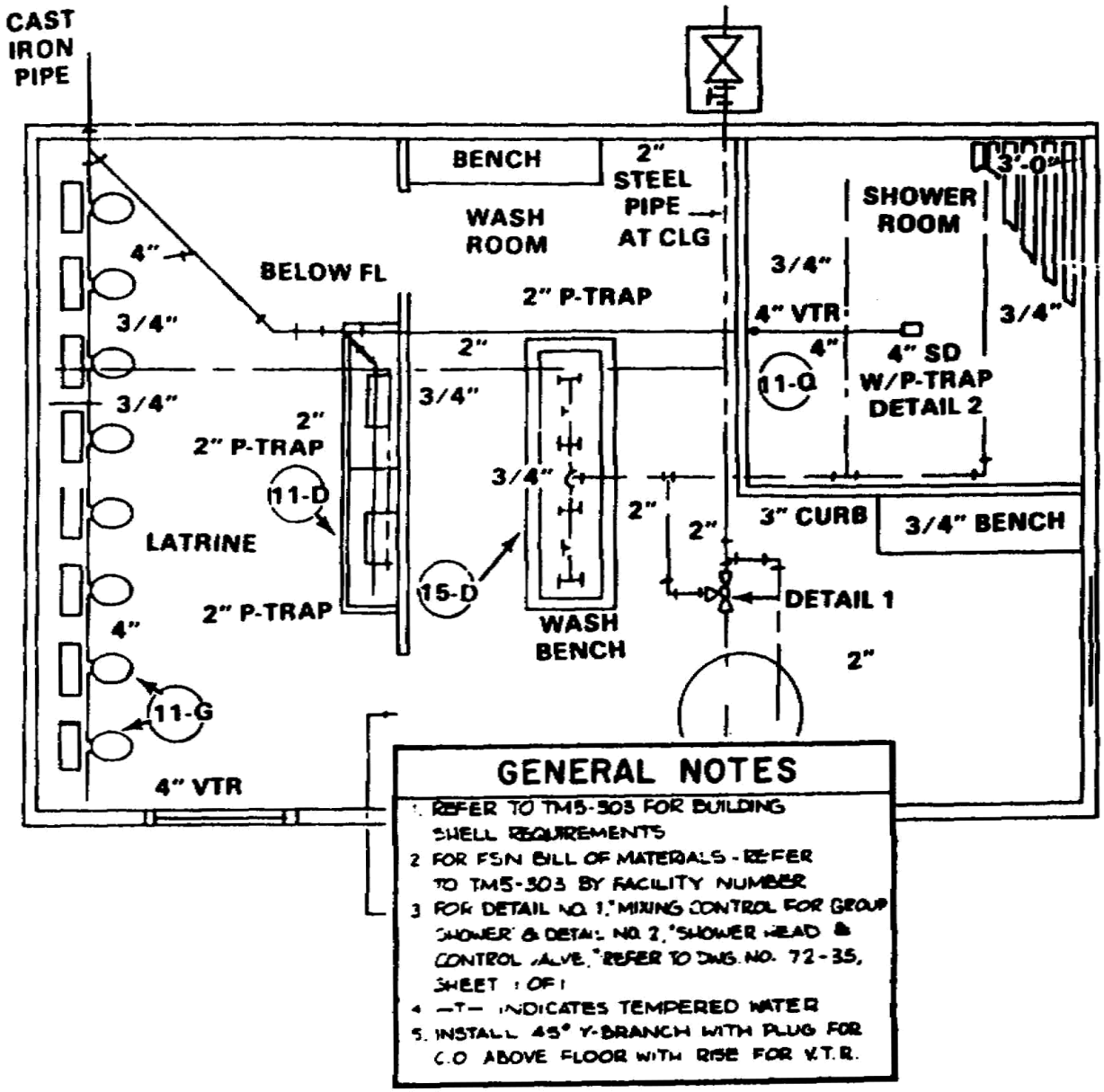

Self-Check Exercise

Match the following valve symbols with the valve descriptions.

1.

2.

3.

A. Faucet, hose bibb
B. Gate valve
C. Globe valve

Self-Check Exercise Solutions

How did you do? Check your responses with those below.

1. is a gate valve. It is used to turn water flow on or off.

2. is a globe valve. It is used to control the flow of water.

3. 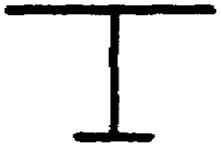 is a faucet, hose bibb. It is used to turn water on or off at fixtures such as a lavatory.

If you had a hard time, review valve symbols and their uses again. If you got then all correct, good work. Continue with the lesson.

Learning Event 3
IDENTIFY FIXTURE SYMBOLS

6. The fixture symbols in a construction drawing show the type of fixture and its location.

a. Figure 1-13 shows fixture symbols.

FIGURE 1-13. FIXTURE SYMBOLS

Symbols/Abbreviations	Meaning	Illustration
WH	LAVATORY, WALL HUNG	
SS	SINK, SERVICE WALL HUNG	
	WATER CLOSET, WALL HUNG, WITH TANK	
LT	WATER CLOSET, LOW TANK	
WH	WATER CLOSET, WITH WALL HUNG TANK	

FIGURE 1-13. FIXTURE SYMBOLS (CONTINUED)

Symbols/Abbreviations	Meaning	Illustration
	URINAL, WALL HUNG	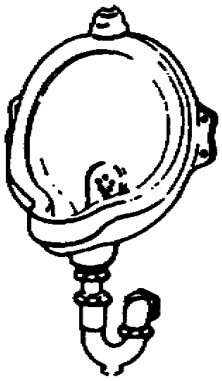
	URINAL, STALL TYPE	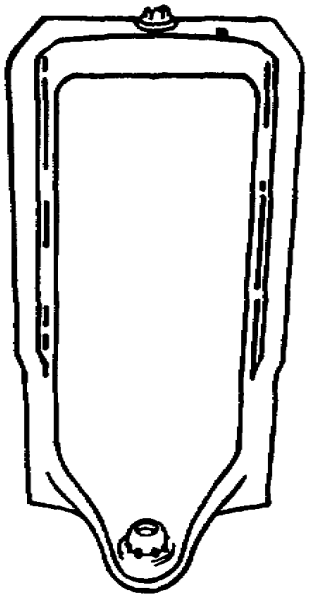
TU	URINAL, TROUGH TYPE	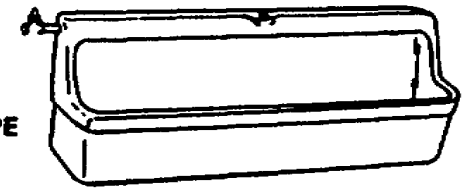

FIGURE 1-13. FIXTURE SYMBOLS (CONTINUED)

Symbols/Abbreviations	Meaning	Illustration
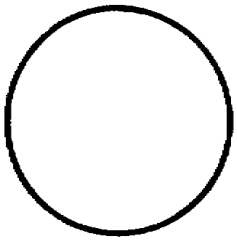 WH	WATER HEATER	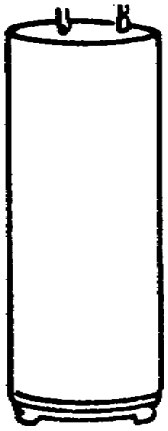
PLAN	SHOWERS, GANGED	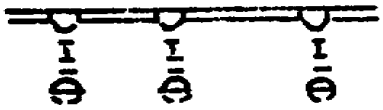
ELEVATION		

b. Figure 1-14 shows fixture symbols used on a diagram.

FIGURE 1-14. DIAGRAM SHOWING TYPES OF FIXTURES

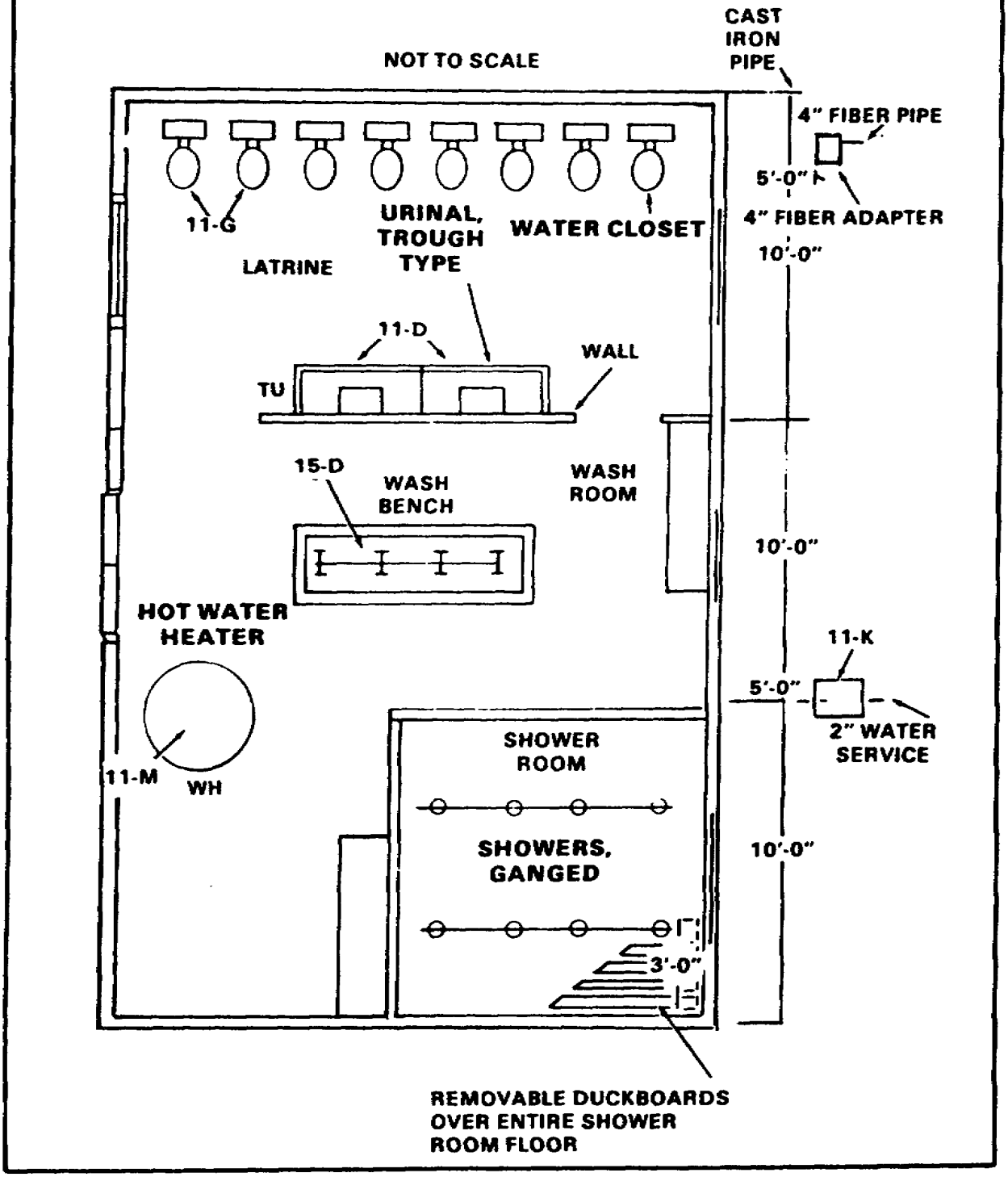

Self-Check Exercise

Match the following fixture symbols with the fixture descriptions.

1. 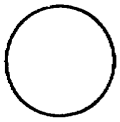

2. 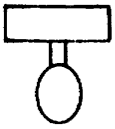

3.

4.

A. Water closet
B. Urinal, wall-hung
C. Sink service, wall-hung
D. Water heater

SUBCOURSE
EN5111

EDITION
A

WATER SUPPLY PLUMBING II

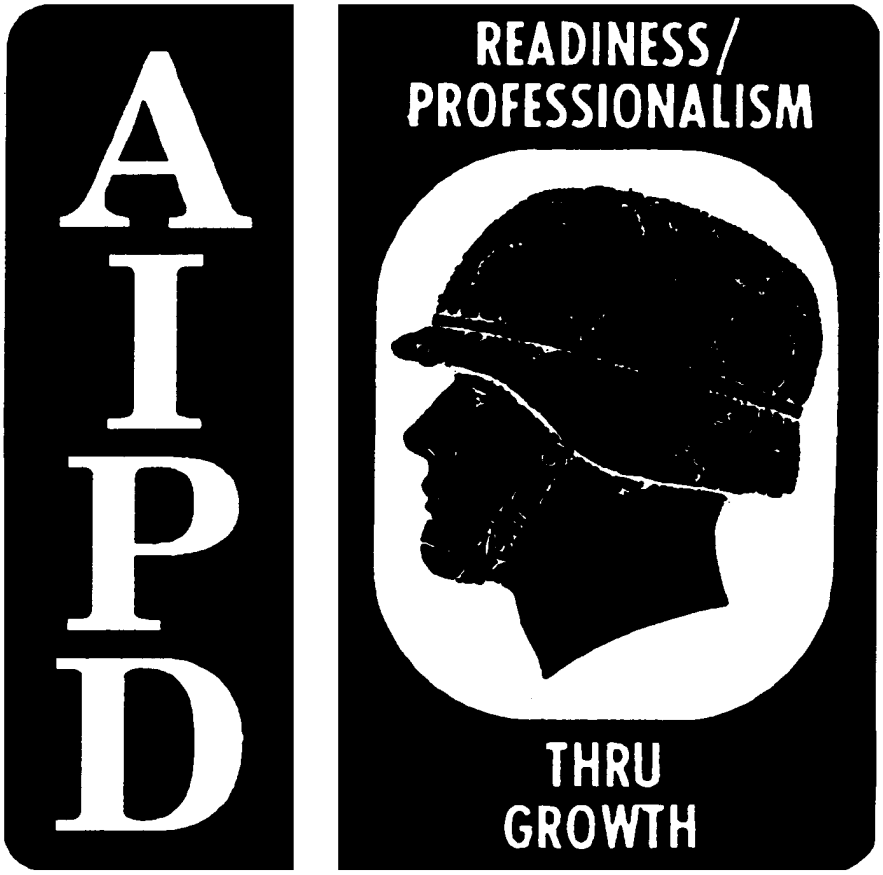

THE ARMY INSTITUTE FOR PROFESSIONAL DEVELOPMENT

ARMY CORRESPONDENCE COURSE PROGRAM

US ARMY PLUMBER
MOS 51K SKILL LEVELS 1 AND 2 COURSE

WATER SUPPLY
PLUMBING II

SUBCOURSE EN5111

US Army Engineer School
Fort Leonard Wood, Missouri

Eleven Credit Hours

GENERAL

The water supply subcourse, part of Plumber MOS 51K Skill Levels 1 and 2 course, is designed to teach the knowledge necessary for performing tasks related to preparing pipes and connecting and installing water pipelines. The subcourse is presented in two lessons. Each lesson corresponds to a terminal objective as indicated below.

Lesson 1: WATER SUPPLY SYSTEMS AND MATERIALS

OBJECTIVE: Describe the procedures used to prepare steel, plastic, and copper pipes for joint connections.

TASK: 051-248-1002. Install steel, plastic, and copper pipe.

CONDITIONS: You will be given the material in this subcourse.

STANDARDS: You should be able to study the lesson resources, answer the practice exercises, and select the correct response for each examination question. To demonstrate competency of the task(s), you must achieve a minimum of 70 percent on the subcourse examination.

Lesson 2: ROUGH-IN WATER SUPPLIES AND LINES

OBJECTIVE: Describe the procedures used to connect, install, and support a rough-in water pipeline system.

TASK: 051-248-1002, Install steel, plastic and copper pipe.

CONDITIONS: You will be given the material in this subcourse.

STANDARDS: You should be able to study the lesson resources, answer the practice exercises, and select the correct response for each examination question. To demonstrate competency of the task(s), you must achieve a minimum of 70 percent on the subcourse examination.

TABLE OF CONTENTS

Page

GENERAL i
ADMINISTRATIVE INSTRUCTIONS iv
GRADING AND CERTIFICATION INSTRUCTIONS iv
INTRODUCTION v

Lesson 1: WATER SUPPLY SYSTEMS AND MATERIALS 1
Learning Event 1: Identifying Types of Piping Materials 2
Learning Event 2: Measuring Pipes 9
Learning Event 3: Preparing Piping Materials 13
Review Exercise 27
Review Exercise Solutions 32

Lesson 2: ROUGH-IN WATER SUPPLIES AND LINES 33
Learning Event 1: Installing Stops (Valves) 34
Learning Event 2: Using Fittings on Pipe Runs 39
Learning Event 3: Installing Water Line Pipe Runs 54
Learning Event 4: Supporting Pipeline Runs 61
Learning Event 5: Testing Systems for Leaks 65
Review Exercise 68
Review Exercise Solutions 72

EXAMINATION E-1

STUDENT INQUIRY SHEET
(**Administrative**) ..... Following Examination

STUDENT INQUIRY SHEET
(**Subcourse Content**) ..... Following Examination

GRADING AND CERTIFICATION INSTRUCTIONS

INSTRUCTIONS TO THE STUDENT

This subcourse has a written performance-based test which covers one task. First, work through the lessons and the practice exercises, then complete the review exercise found at the end of each lesson. The exercises are to help you to determine your understanding of the lessons. When you are ready to take the test, read all the directions and take the test. You must correctly answer 70 percent of the questions to successfully complete the subcourse. Eleven credit hours will be awarded for successful completion of this subcourse.

INTRODUCTION

A plumber has to have the ability to join and install different kinds of pipes that can be used to complete the water supply pipe system of a building. These pipes are made of different materials, and many times they will have to be cut and their ends prepared for fitting connections to form leakproof joints. These connections are made with threaded joints, fused joints, and compression joints depending on the type of pipe. As the pipe system is installed with fittings, it must be supported with hangers and holders. Many times a plumber must cut into the building structure to place water supply pipeline runs to service all lavatories, sinks, and water closets that are to be installed. The plumber also tests the rough-in water supply pipeline system for leaks when it is completely installed.

Lesson 1
WATER SUPPLY SYSTEMS AND MATERIALS

OBJECTIVE
At the end of this lesson, you will be able to describe the procedures for preparing steel, plastic, and copper pipes for joint connections.

TASK
051-248-1002, Install steel, plastic and copper pipe.

CONDITIONS:

You will be given the material in this subcourse.

STANDARDS:
You should be able to study the lesson resources, answer the practice exercises, and select the correct response for each examination question. To demonstrate competency of the task(s), you must achieve a minimum of 70 percent on the subcourse examination.

CREDIT HOURS
3.

REFERENCES
TM 5-551K and FM 5-51K 1/2.

Learning Event 1:
IDENTIFYING TYPES OF PIPING MATERIALS

The layout or repair of a water supply system requires that pipes are measured to specific lengths and cuts and the ends prepared to form joints. Pipe lengths can be measured in several ways. The measurement has to allow for the pipe engagement into a fitting and a fitting's dimension.

The various types of piping that can be used for a water supply system are listed below.

PIPING MATERIALS

TYPES OF PIPING MATERIALS	WATER SYSTEM USAGE	PIPING DESCRIPTION	
Galvanized steel pipe	Hot and cold water lines	Rigid	
Copper tubing pipe			
K - Thick wall	Hot and cold water lines	Rigid	Flexible
L - Medium wall	Hot and cold water lines	Rigid	Flexible
M - Thin wall	Hot and cold water lines	Rigid	
Plastic pipe			
PB - Polybutylene	Hot and cold water lines		Flexible
PE - Polyethylene	Cold water lines		Flexible
PVC - Polyvinyl Chloride	Cold water lines	Rigid	
CPVC - Chlorinated Polyvinyl Chloride	Hot and cold water lines	Rigid	

Galvanized Steel Pipe. Use galvanized steel pipe above and below ground. This pipe comes in different lengths, and cutting may be necessary to allow threading.

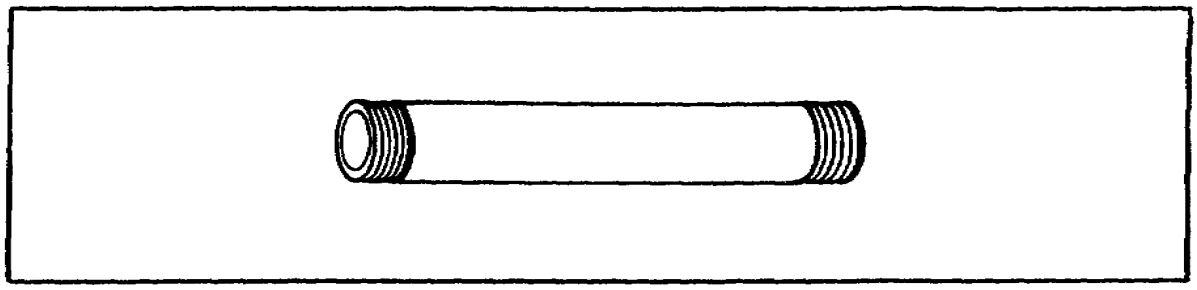

Rigid Copper Tubing. Copper tubing comes in 10- and 20-foot lengths and is used only above ground. Types K, L, and M have the same outside diameter to accept fittings. The inside diameters for K, L, and M are different.

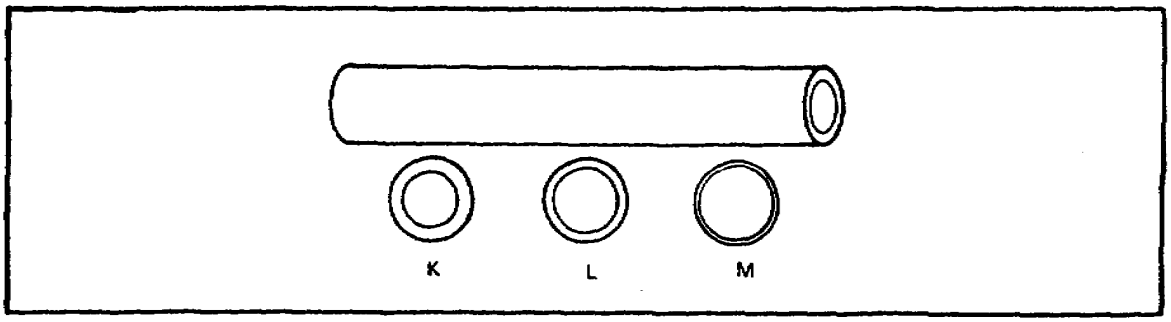

Flexible Copper Tubing. Flexible copper tubing comes in coils of 60 or 100 feet. Types of K and L can be used above and below ground. Both types have the advantage of bending with the use of a bending tool for installation.

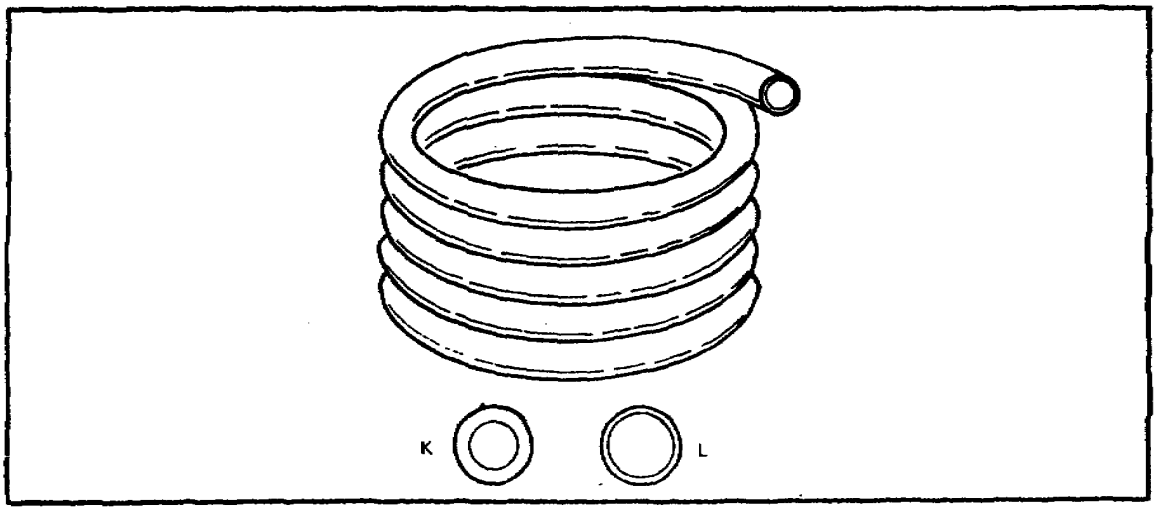

Rigid Plastic Pipe. Plastic pipe comes in 10- and 20-foot lengths and is used above and below ground. Type PVC is used for cold water supply lines. Type CPVC is used for cold and hot water lines and is temperature-rated up to 180 degrees.

PVC - Polyvinyl chloride

CPVC - Chlorinated polyvinyl chloride

Flexible Plastic Pipe. This comes in coils of 100 feet and is used above ground only. Type PB is used for cold and hot water lines and is temperature-rated from 180 to 200 degrees. Type PE is used only for cold water lines.

Note. Check local plumbing codes to determine if the plastic pipe is authorized for installation.

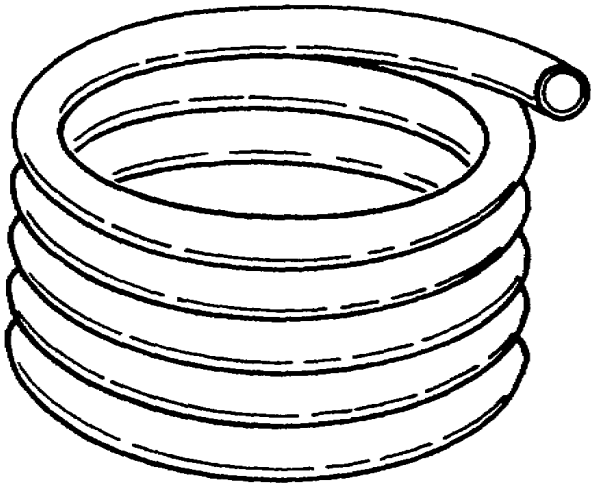

PB - Polybutylene

PE - Polyethylene

Use the following to make pipe engagements into a fitting for threaded steel pipes, rigid copper pipes, and rigid plastic pipes:

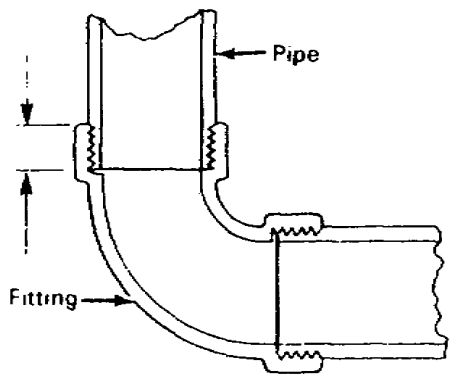

SIZE OF STEEL PIPE (INCHES)	THREADED ENGAGEMENT (INCHES) (APPROXIMATE)
1/4	3/8
3/8	3/8
1/2	1/2
3/4	1/2
1	9/16
1 1/4	5/8
1 1/2	5/8
2	11/16

Rigid Copper. Measure the distance from the end of the fitting to the collar inside the fitting.

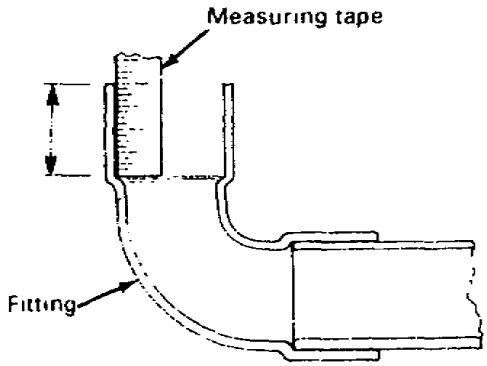

Lesson 1/Learning Event 1

Rigid Plastic. Measure the distance from the end of the fitting to the collar inside the fitting.

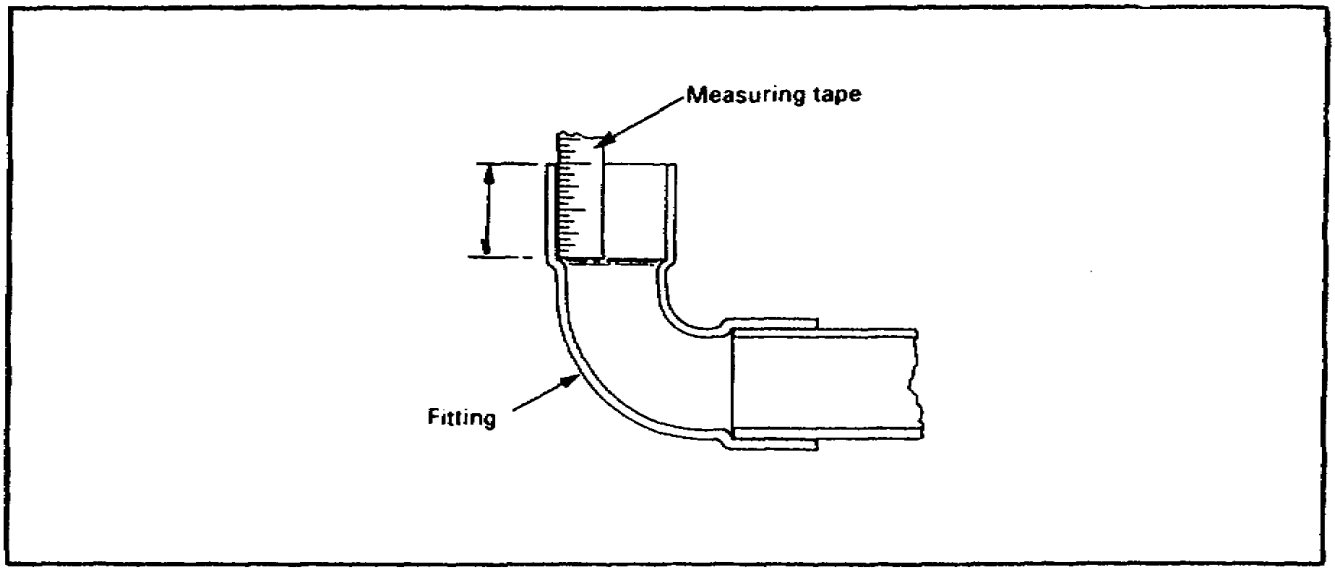

The fitting dimensions for steel pipes, rigid copper pipes, and rigid plastic pipes are shown below. To calculate a fitting's dimension, measure the distance from the end of the fitting to the center of the fitting.

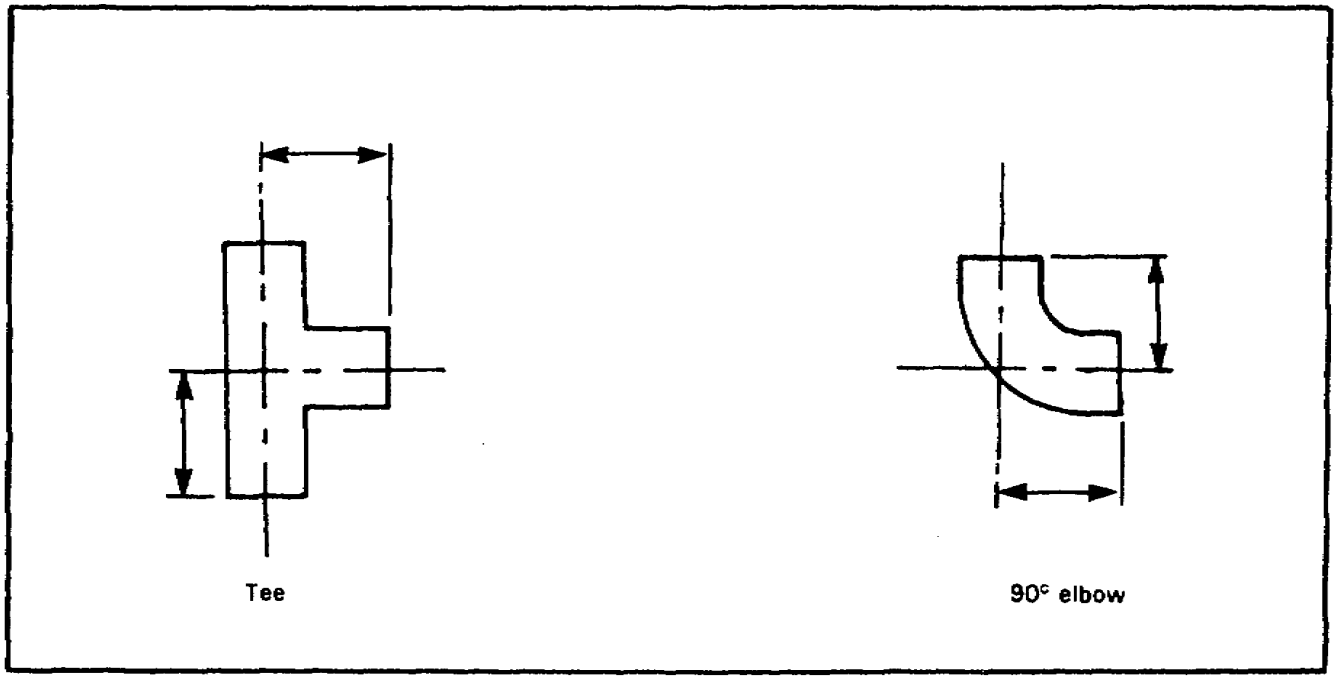

Learning Event 1
SELF-CHECK EXERCISE

1. Refer to the information given below. What is the pipe engagement for a 1 1/2-inch threaded steel pipe?

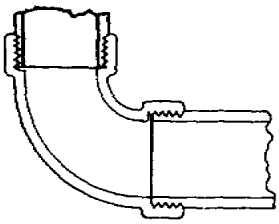

SIZE OF STEEL PIPE (INCHES)	THREADED ENGAGEMENT (INCHES) (APPROXIMATE)
1/4	3/8
3/8	3/8
1/2	1/2
3/4	1/2
1	9/16
1 1/4	5/8
1 1/2	5/8
2	11/16

2. Which letter shows the correct pipe engagement for rigid plastic pipes?
   A.
   B.

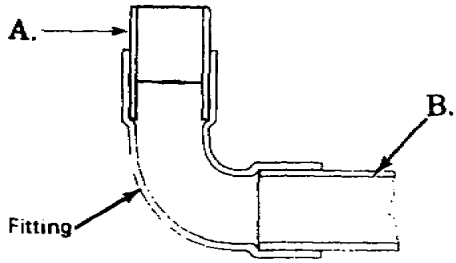

3. Which letter shows the correct fitting dimension?
   A.
   B.

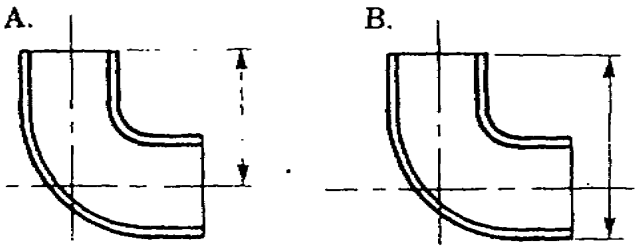

Learning Event 1
SELF-CHECK EXERCISE SOLUTIONS

Your answers should be-

1. Five-eighth inch is the pipe engagement for a 1 1/2-inch pipe.
2. B is the correct answer. The plastic pipe must be against the collar in the fitting.
3. A is the correct answer. The fitting dimension is the distance from the end of the fitting to the center of the fitting.

If your answers are correct, GREAT. Continue on with the lesson. If not, go back and review the material.

Learning Event 2: Measuring Pipes

Use the following to determine pipe measurements with pipe engagements and fitting dimensions:

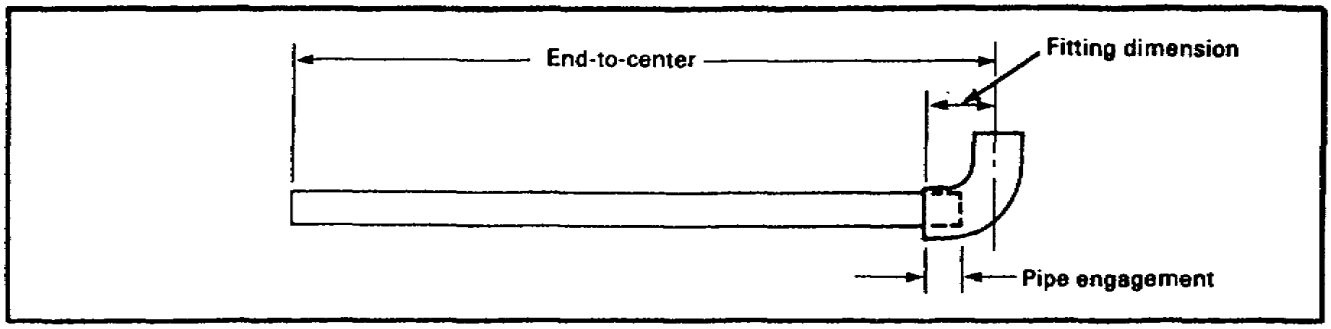

The example below shows the computation used for an end-to-center measurement.

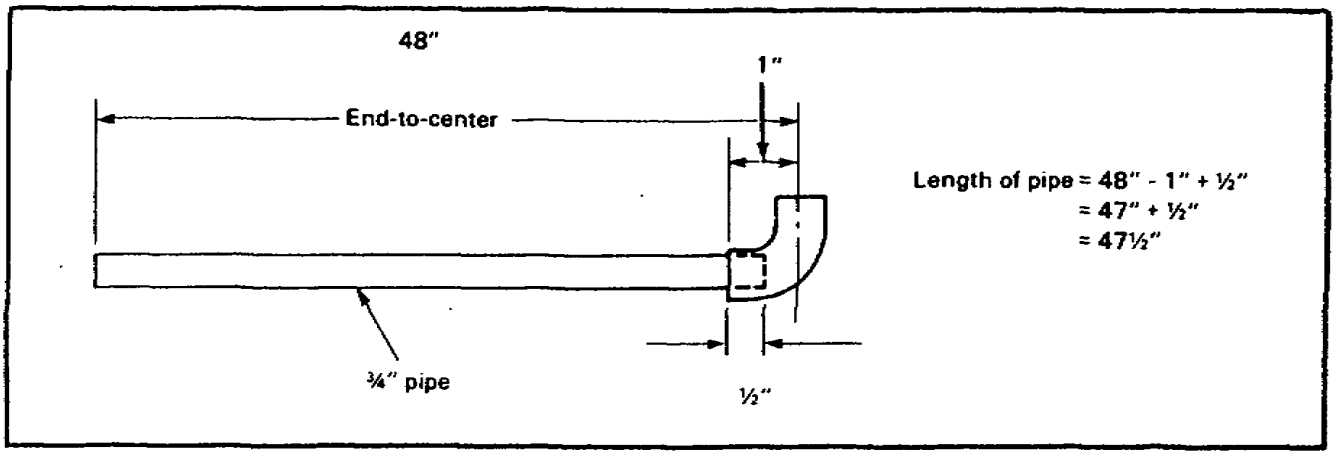

Center-to-Center Measurement. Use the formula: length of pipe equals center-to-center measurement minus both fitting dimensions plus both pipe engagements.

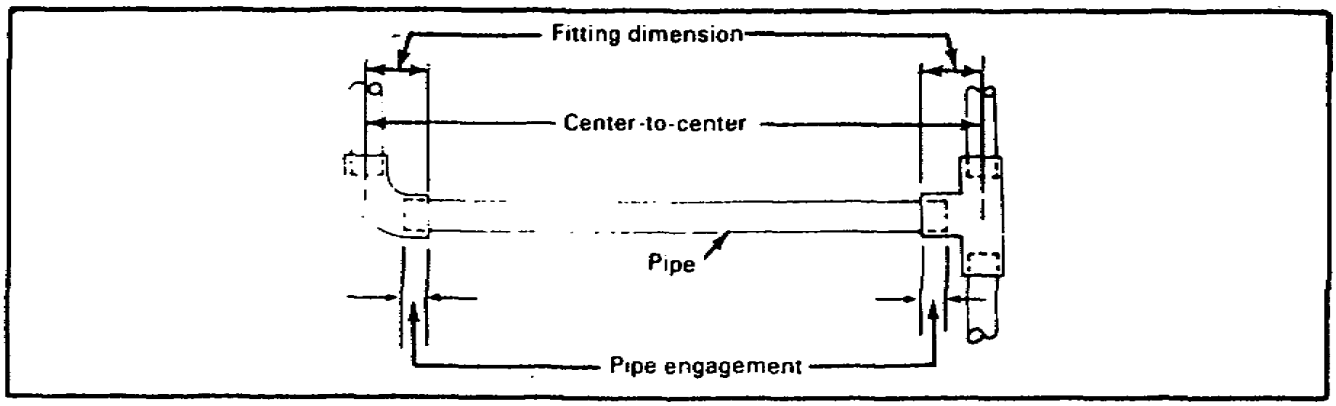

Lesson 1/Learning Event 2

The example below shows the computation used for a center-to-center measurement.

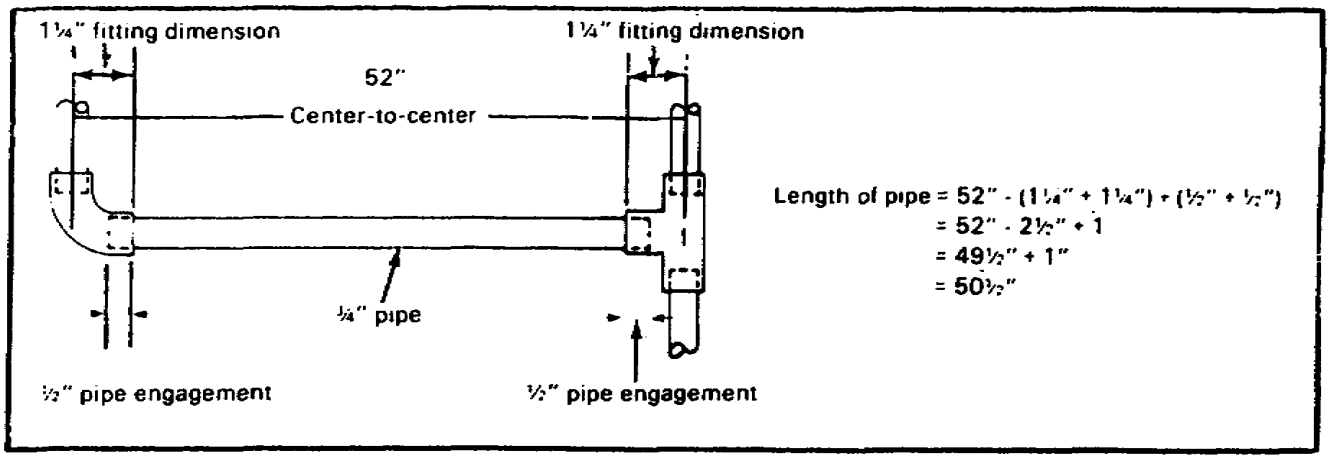

Face-to-Face Measurement. Use the formula: length of pipe equals face-to-face measurement plus both pipe engagements.

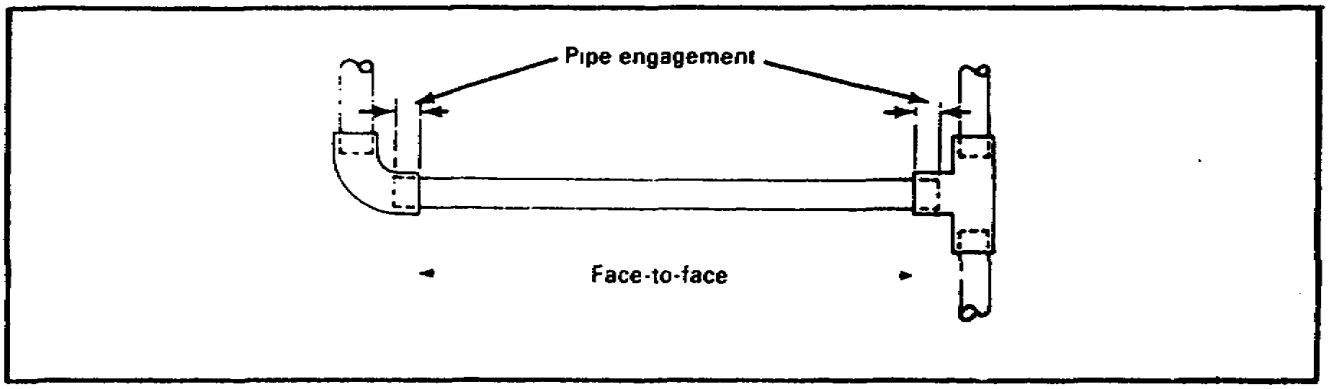

The example below shows the computation used for a face-to-face measurement.

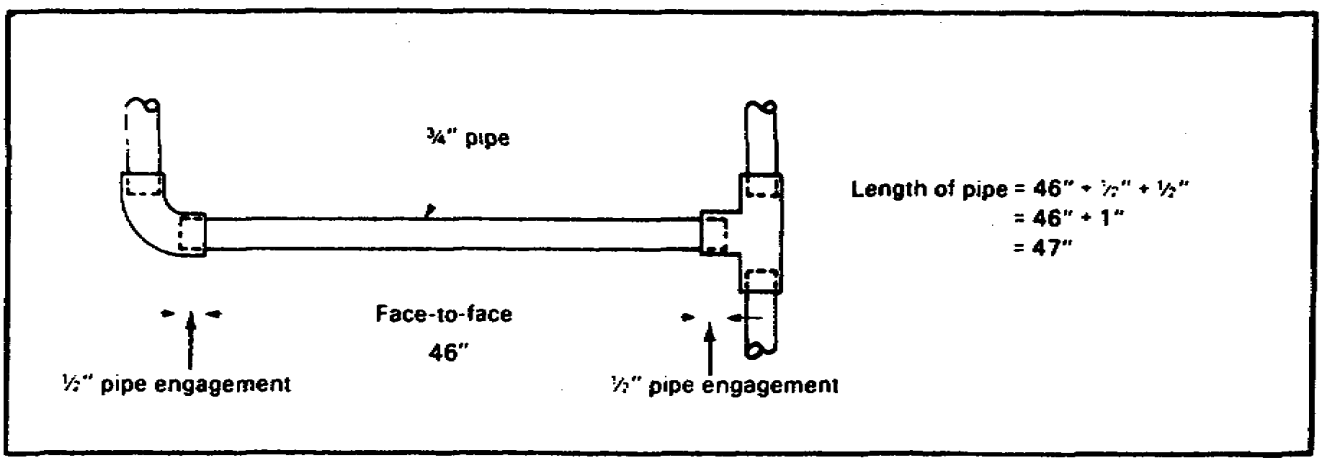

Learning Event 2
SELF-CHECK EXERCISE

1. Refer to the illustration below. What is the length of a 1/2-inch pipe when you are using the formula for center-to-center measurement?

   A. 93 1/3 inches
   B. 94 1/2 inches
   C. 95 inches
   D. 95 3/4 inches

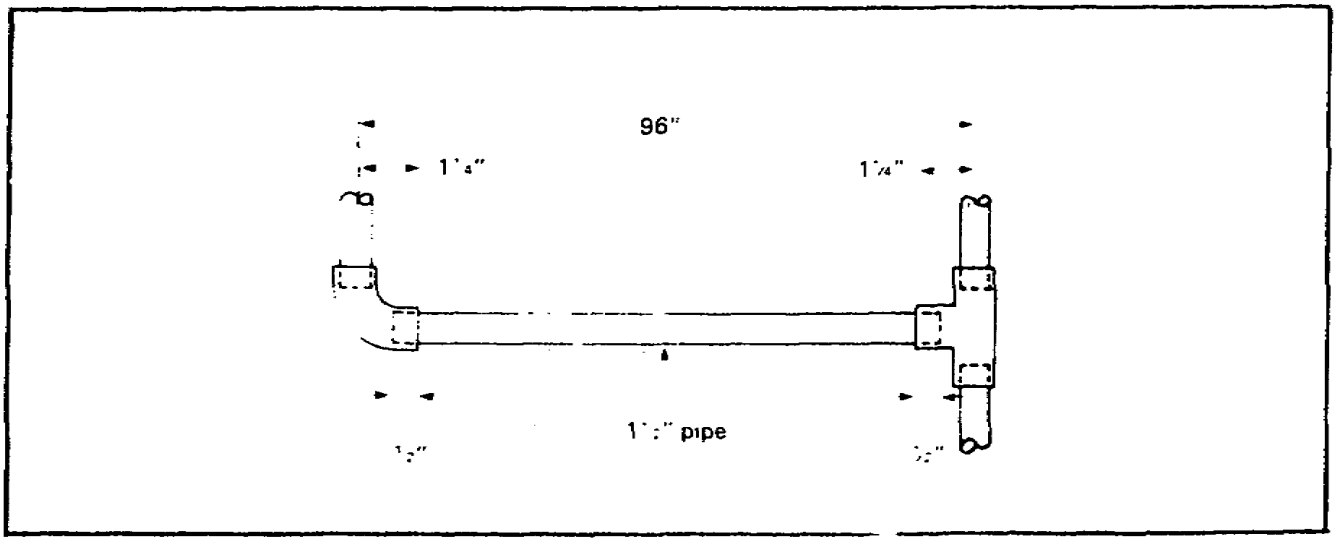

Lesson 1/Learning Event 2

SELF-CHECK EXERCISE SOLUTIONS

Your answer should be B, 94 1/2 inches. To determine the answer, check the following methods:

- Center-to-center measurement is 96 inches.
- Subtract the two fitting dimensions, 1 1/4 inches + 1 1/4 inches = 2 1/2 inches, from 96 inches (96 inches - 2 1/2 inches = 93 1/2 inches.
- Add the two pipe engagements, 1/2 inch + 1/2 inch, to 93 1/2 inches which should equal 94 1/2 inches.

If your answer is correct, GREAT. Continue on with the lesson. If not, go back and review the material.

Learning Event 3
PREPARING PIPING MATERIALS

Use the following steps to prepare a galvanized steel pipe for a joint connection:

Cutting the Pipe. Place the pipe in a vise with the measured mark about eight inches from the vise. Set the cutting wheel on the mark and turn the cutter handle to get a bite on the pipe. To cut the pipe, turn the cutter clock wise and apply the cutting oil to the cutting wheel. After each complete turn, give the handle a quarter turn until the pipe is cut.

Note. When pipe cutter is not available, use a hacksaw and insure the cut is as square as possible to simplify threading the pipe.

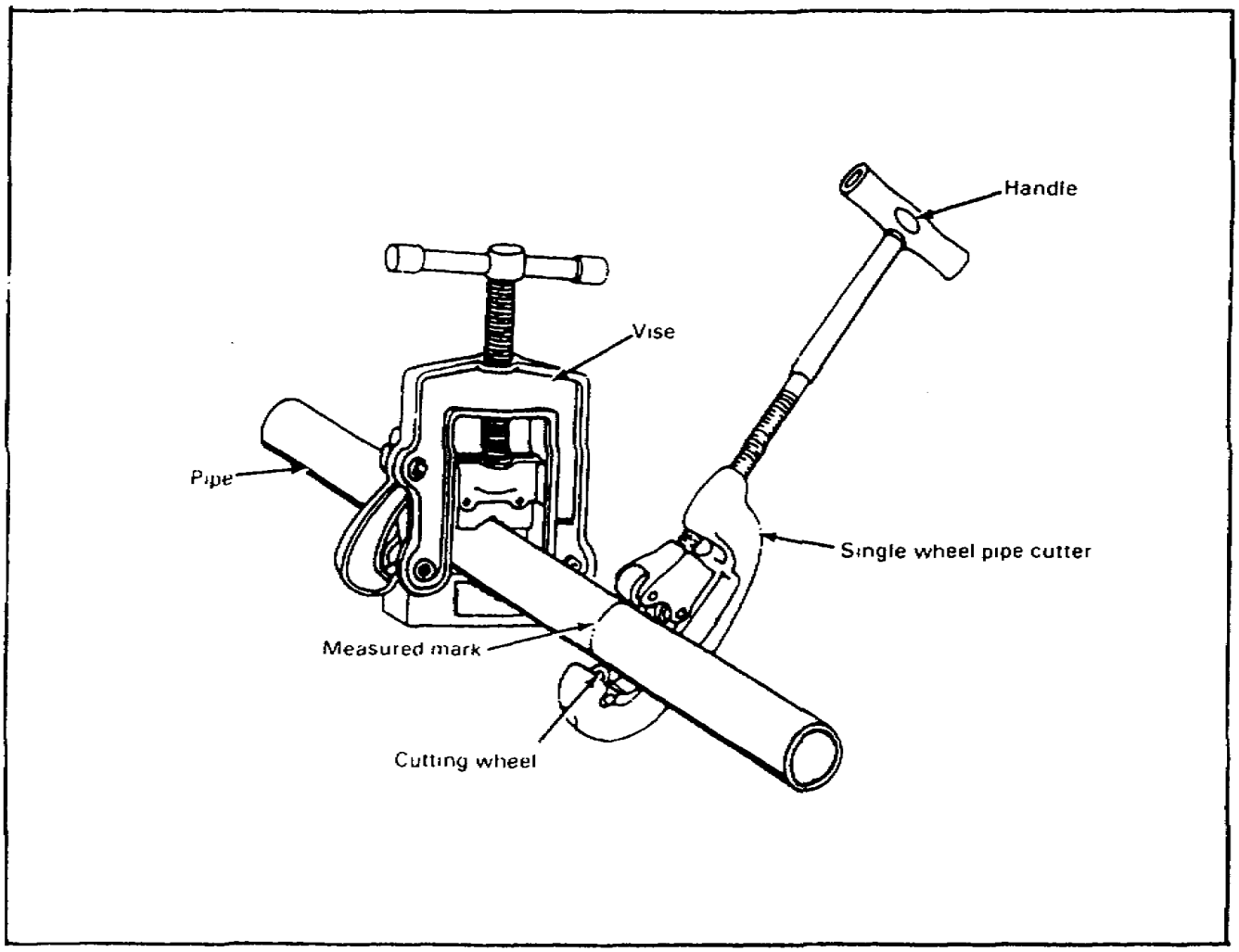

Lesson 1/Learning Event 3

USING A PIPE CUTTER

Removing Burrs. Push the reamer into the pipe and apply pressure with one hand. With the other hand, turn the reamer clockwise using short even strokes until all the burrs are removed from the cut end. Use a fine metal file to remove burrs from the outside of the pipe.

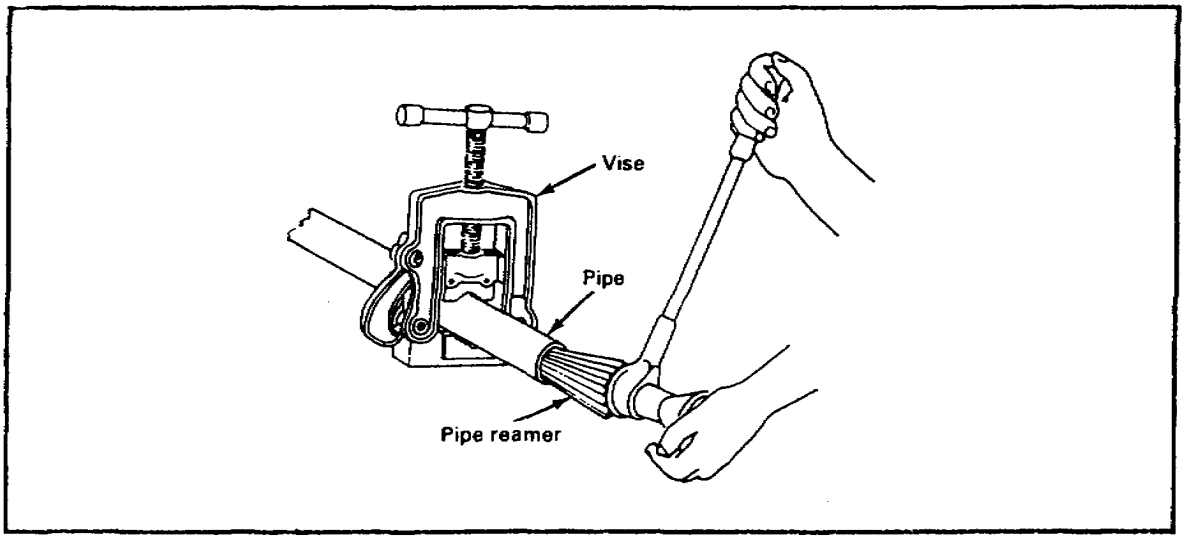

Threading Pipe Ends. Insert the correct size die into the die stock. Slide the die stock over the pipe and apply pressure with one hand. With the other hand, turn the stock handle slowly clockwise until the die has taken a bite on the pipe. Apply cutting oil to the die as the stock handle is given one complete clockwise turn and backed off a quarter turn. Repeat this action until 1/4 inch of the pipe is beyond the die stock. The pipe is now threaded properly. Turn the handle in a counterclockwise direction to remove the pipe.

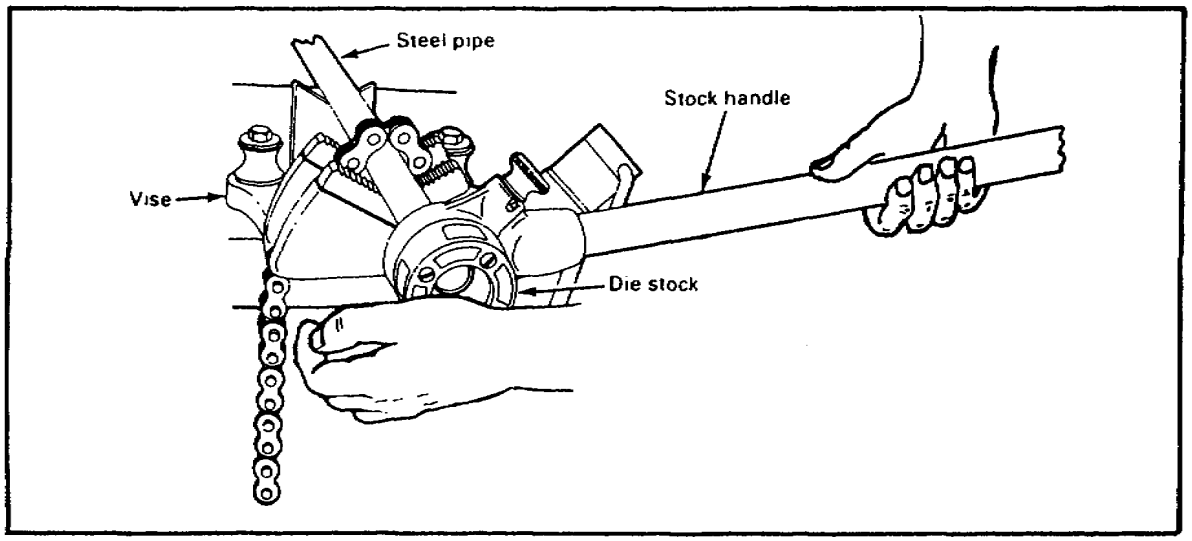

SELF-CHECK EXERCISE

Fill in the blanks with your answers.

1. A galvanized steel pipe can be cut with a _____ and a _____.

2. Remove burrs from the inside ends of a galvanized pipe with a _____.

3. When threading a galvanized pipe, back off the stock handle _____turn after each complete turn around the pipe.

Lesson 1/Learning Event 3

SELF-CHECK EXERCISE SOLUTIONS

Your answers should be-

1. Pipe cutter and a hacksaw
2. Reamer
3. One-quarter turn

If your answers are correct, GREAT. Continue on with learning event 3. If not, go back and review the material.

Use the following steps to prepare copper tubing ends for joint connections:

Cutting the Pipe. Hold the tubing with one hand and set the cutting wheel on the mark. Turn the knob until the wheel takes a bite on the tubing. Turn the cutter clockwise around the tubing and turn the knob at the same time to cut the tubing. To make a square cut on the tubing, use a fine-tooth blade on the hacksaw and use a miter box.

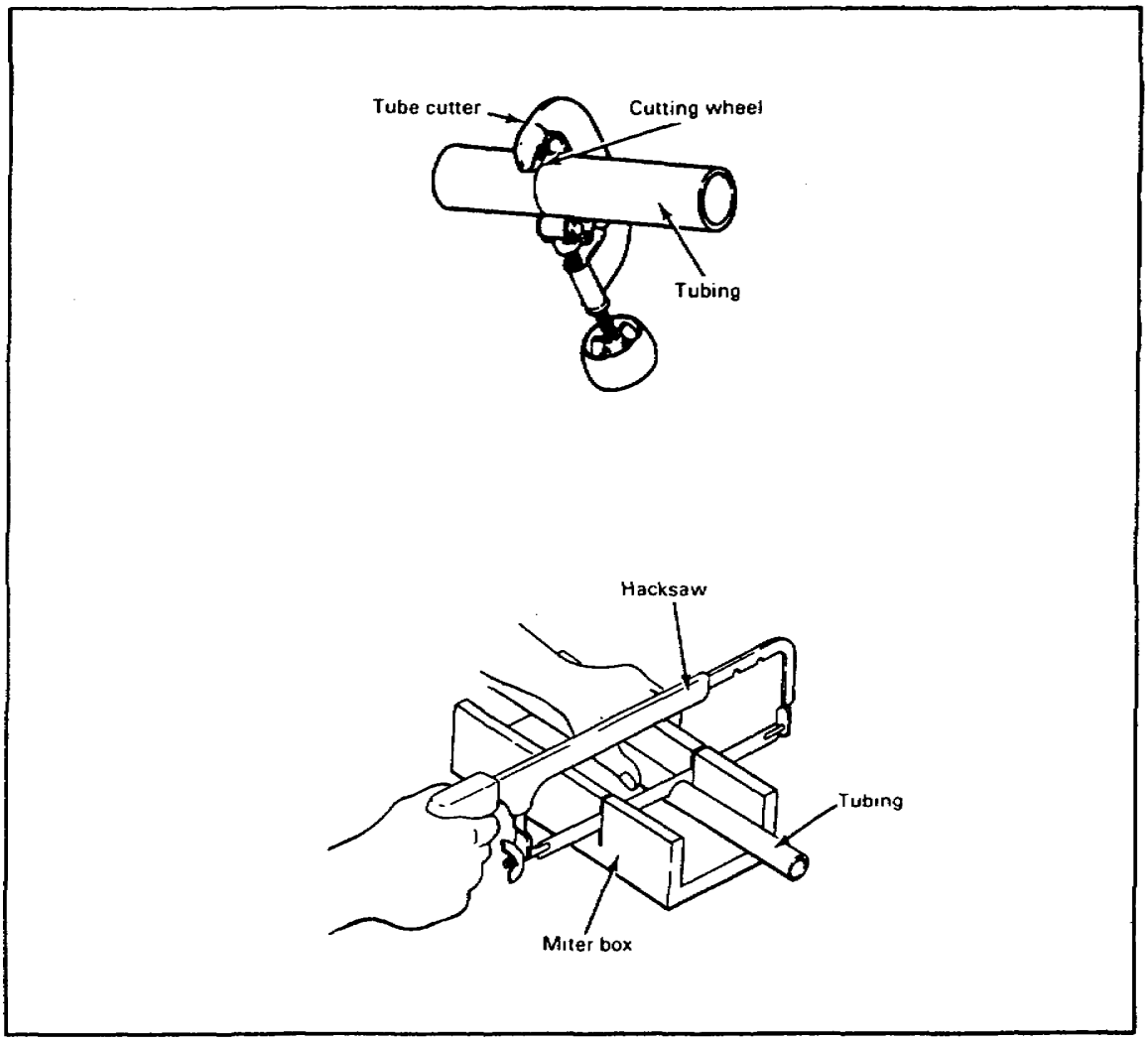

Removing the Burrs. Push the reamer blade into the tubing and turn the tubing clockwise with even strokes.

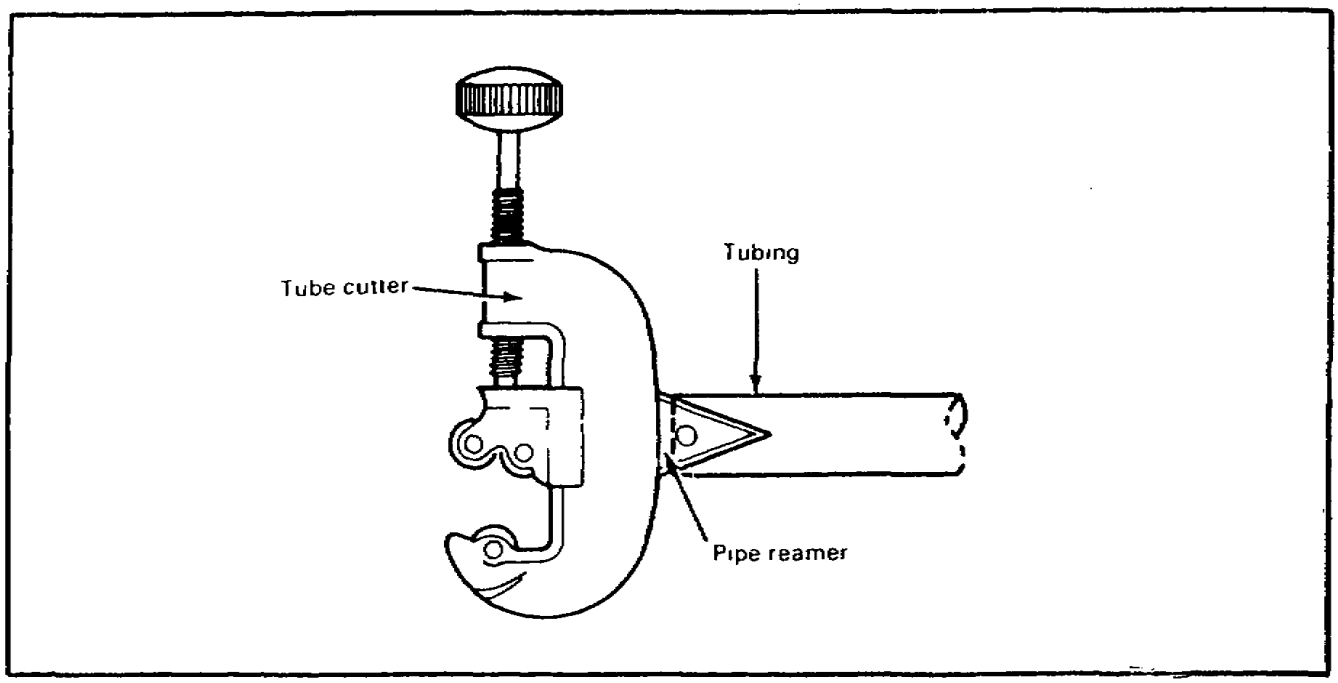

Preparing for Soldered Joints. Use emery cloth to clean the tubing's end to a bright shine. Use the same procedure to clean the inside of the fitting.

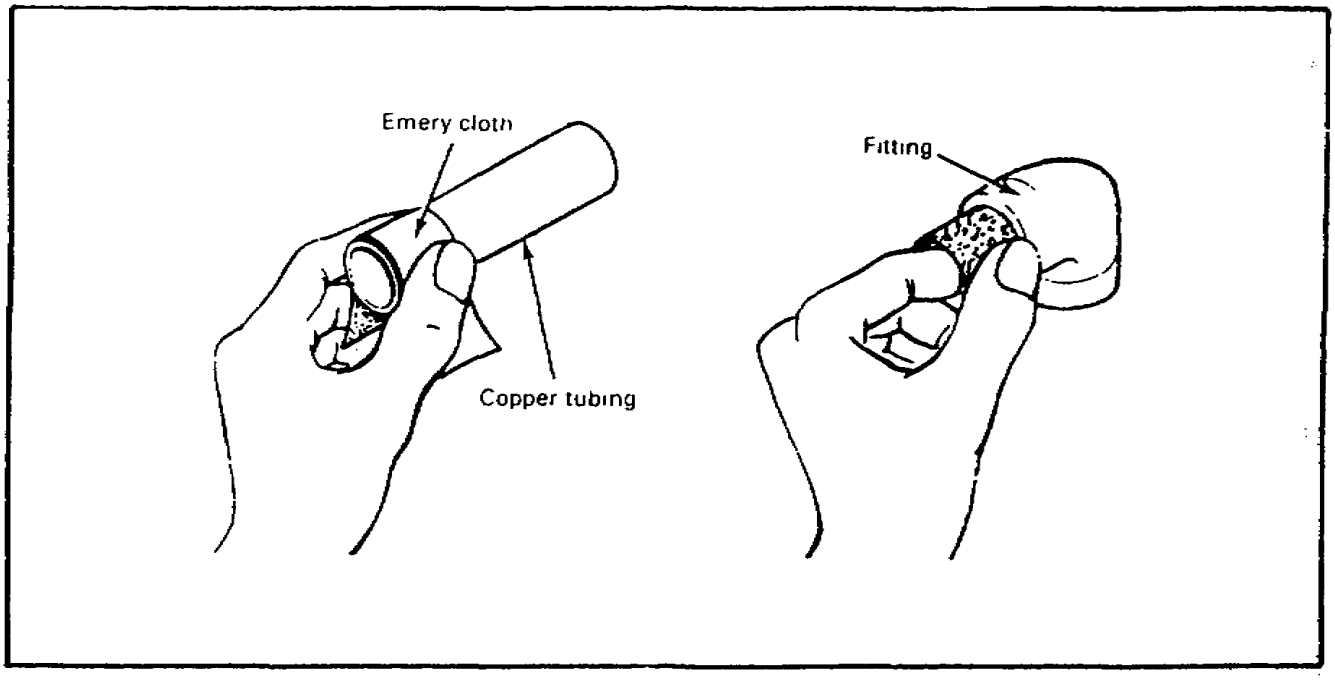

Preparing for Swaged Joint. Slide the tool into the tubing and hold the tubing and the tool with one hand. Place the hammer in the other hand and hit the tool until the pipe end is swaged. Use a swaged joint to join two pieces of thin-walled copper tubing without using a fitting. The swaged end is the size of a regular copper fitting.

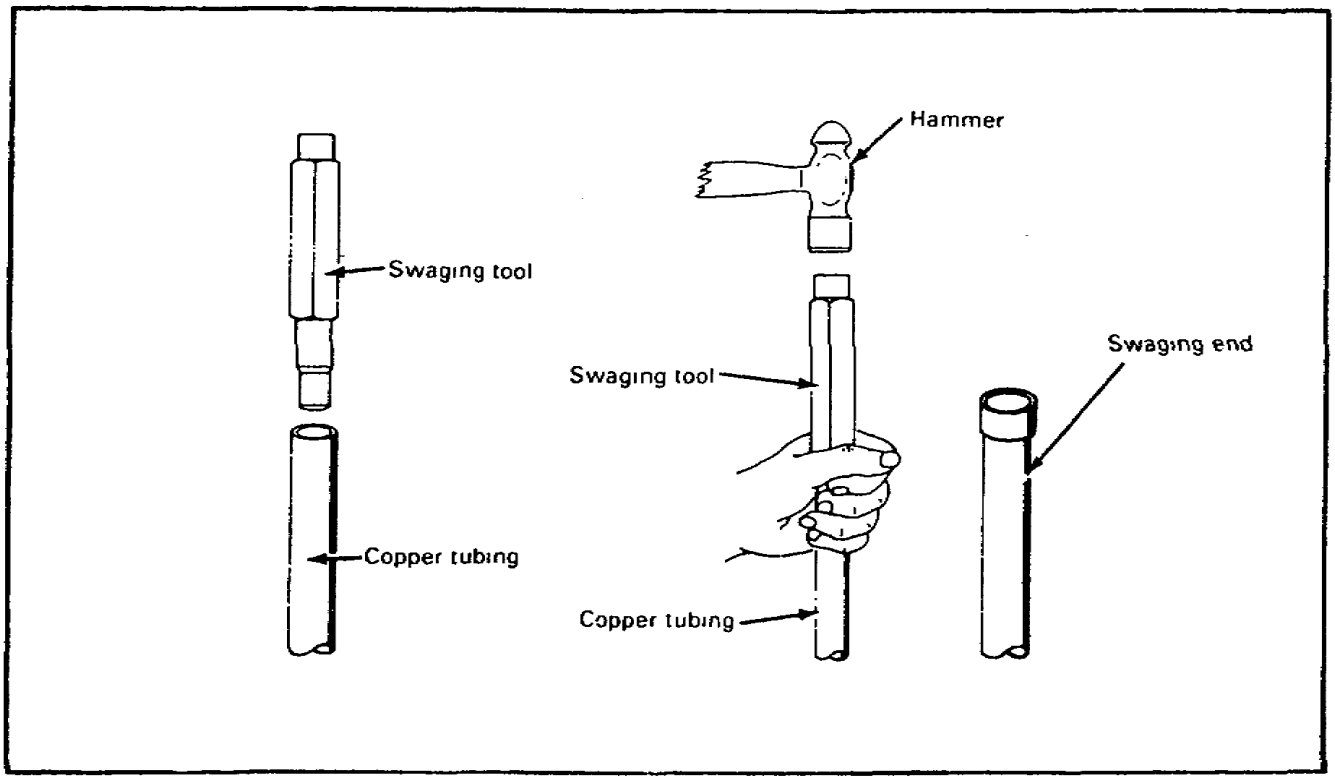

Lesson l/Learning Event 3

Preparing for Flared Joint. With a flaring tool, first slide a flange nut onto the tubing. Open the yoke by loosening the wing nuts; then place the tubing in the proper size hole, and tighten the nuts. Insure the tubing is level with the top of the yoke. Turn the cone down into the tubing until it fills the bevel in the hole. The tubing is now flared.

Preparing with Flanging Tool. First slide the flange nut onto the tubing. Hold the tubing and flange nut in hand. Center the flanging tool in the tubing and tap it with a hammer until the flare fills the recess in the flange nut.

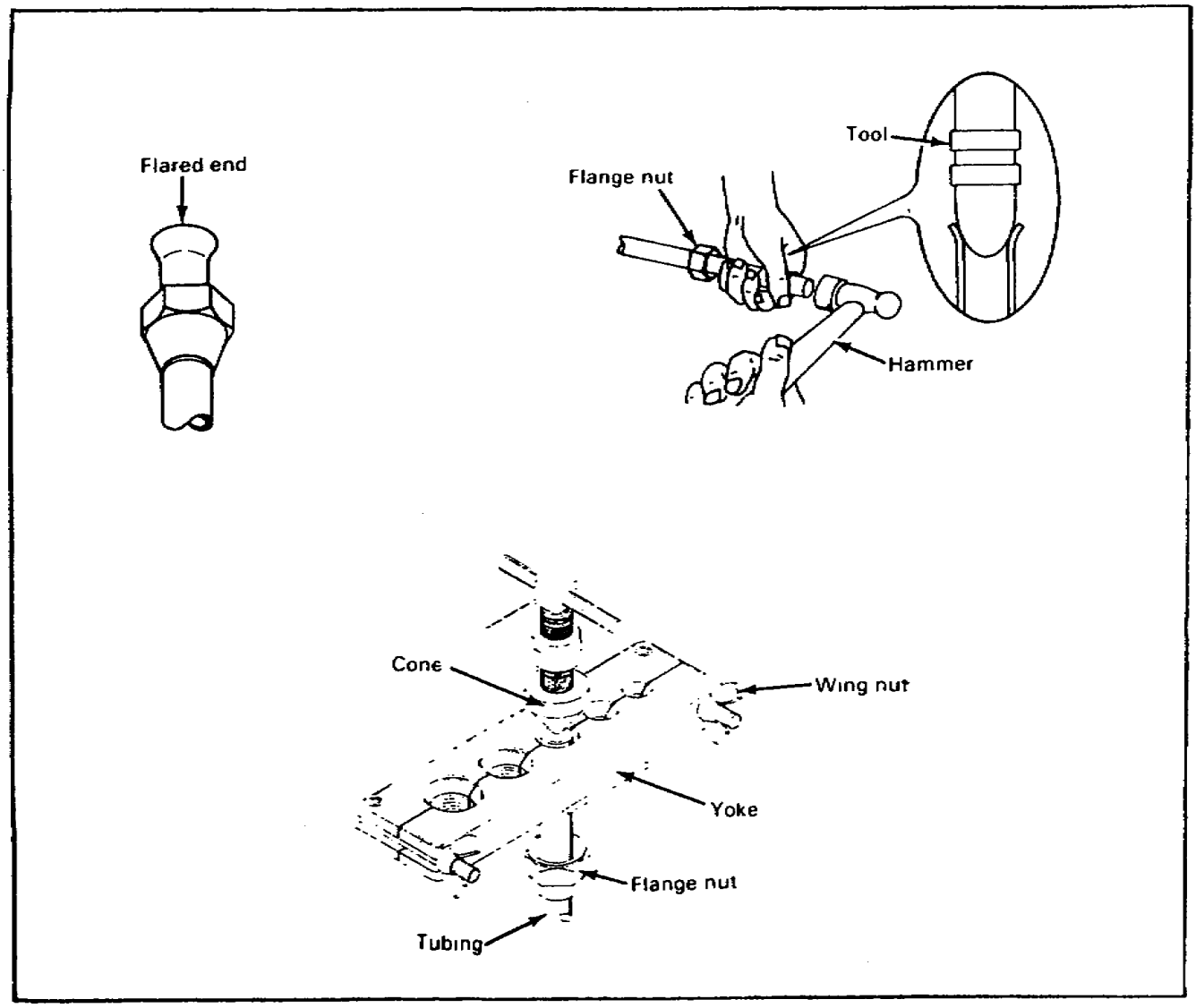

SELF-CHECK EXERCISE

Fill in the blanks with your answers.

1. A copper tubing can be cut with a _____ and a _____.

2. The ends of a copper tubing are cleaned to a bright shine with an _____.

3. Thin-walled copper tubing ends can be prepared for three kinds of joint connections. List them.
   A.
   B.
   C.

Lesson 1/Learning Event 3

SELF-CHECK EXERCISE SOLUTIONS

Your answers should be-

1. Tube cutter and a hacksaw
2. Emery cloth
3. A. Soldered
   B. Swaged
   C. Flared

Note. The order of the answers in question 3 is not important.

If your answers are correct, GREAT. Continue on with learning event 3. If not, go back and review the material.

Preparing Joint Connections. Use the following steps to prepare rigid, plastic, and flexible pipes' ends for joint connections.

Use a hacksaw in a miter box to cut the pipe.

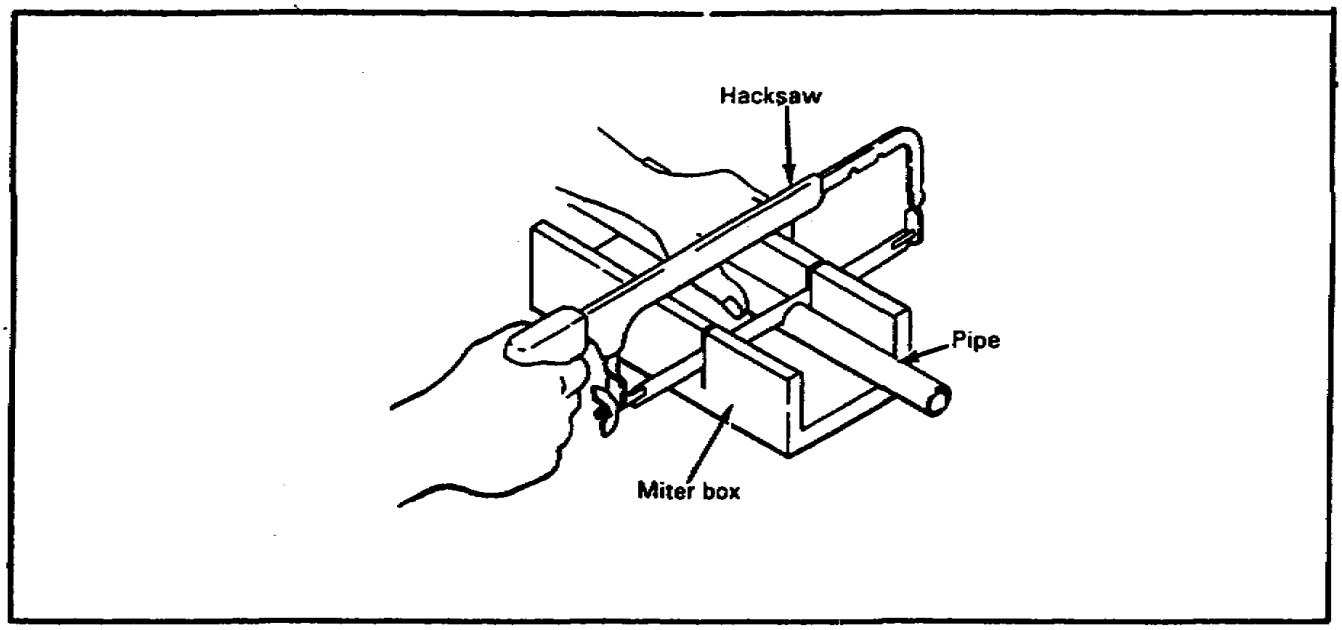

Remove burrs from the pipe's cut ends with a knife or sandpaper

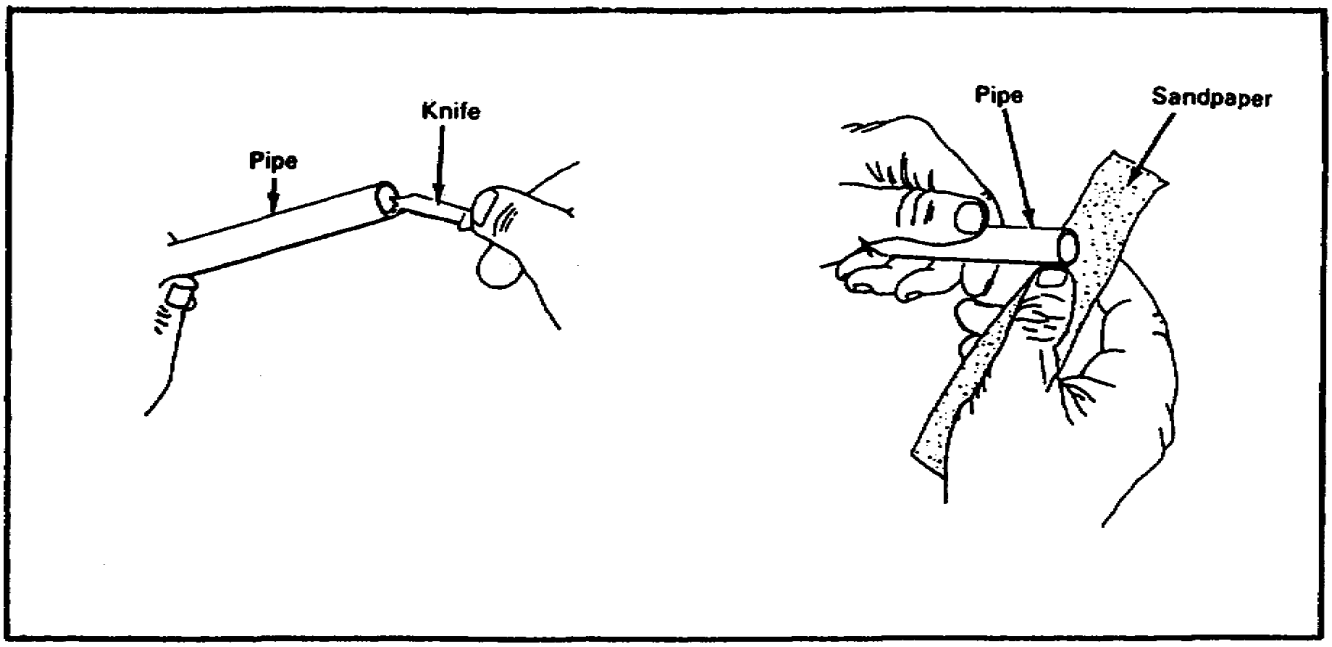

Lesson 1/Learning Event 3

To prepare the ends of a plastic pipe for a cemented solvent weld joint, sand the pipe ends to remove the pipe gloss.

Note. CPVC plastic pipe requires a special cleaner on the pipe's ends for solvent weld joints.

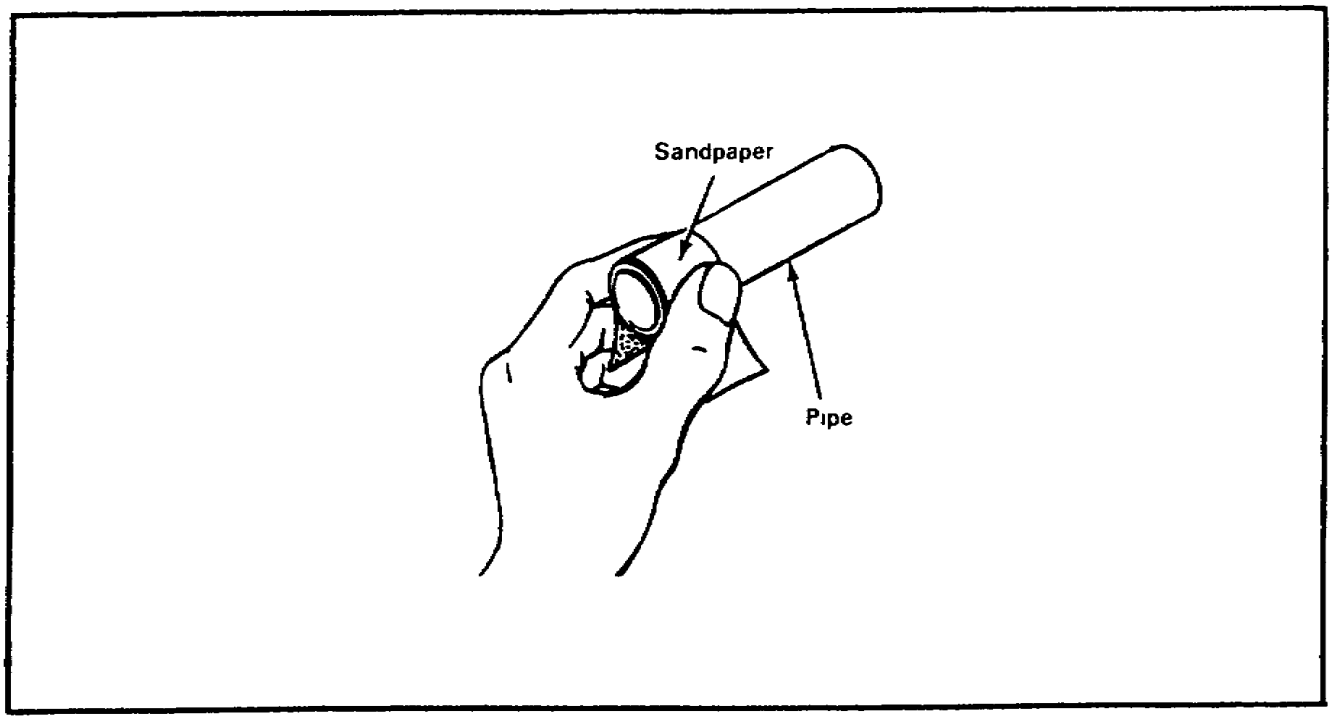

SELF-CHECK EXERCISE

Fill in the blanks with your answers.

1. A plastic pipe is cut with a _____.
2. The burrs on the cut ends of a plastic pipe are removed with a _____.
3. The ends of a rigid plastic pipe are cleaned with sandpaper to remove the pipe's _____.

Lesson 1/Learning Event 3

SELF-CHECK EXERCISE SOLUTIONS

Your answers should be-

1. Hacksaw
2. Knife
3. Gloss

If your answers are correct GREAT. Continue on with the lesson. If not go back and review the material.

Lesson 1

REVIEW EXERCISE

Check your understanding of lesson 1 by completing this review exercise. Try to complete all of the exercise without looking back at the lesson. When you are finished, turn to the solutions at the end of the lesson and check your responses. If you missed any questions, go back and restudy that section in the lesson where the information is given.

1. List the three types of pipes used in a water system.

   A.

   B.

   C.

2. Refer to the information given below. What is the threaded engagement for a 1-inch galvanized steel pipe?

   A. 1/2 inch

   B. 9/16 inch

   C. 5/8 inch

   D. 11/16 inch

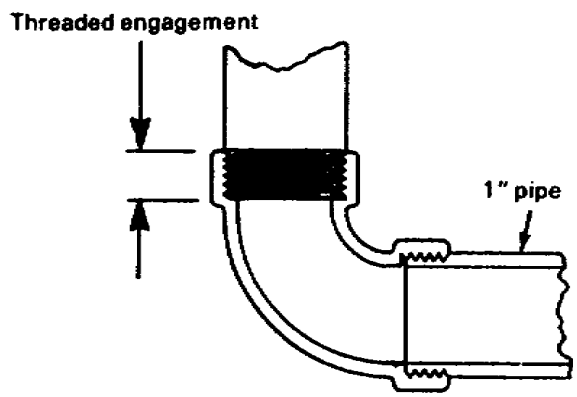

SIZE OF STEEL PIPE (INCHES)	THREADED ENGAGEMENT (INCHES) (APPROXIMATE)
1/4	3/8
3/8	3/8
1/2	1/2
3/4	1/2
1	9/16
1 1/4	5/8
1 1/2	5/8
2	11/16
2 1/2	15/16
3	1

3. Which letter shows a correct fitting dimension?

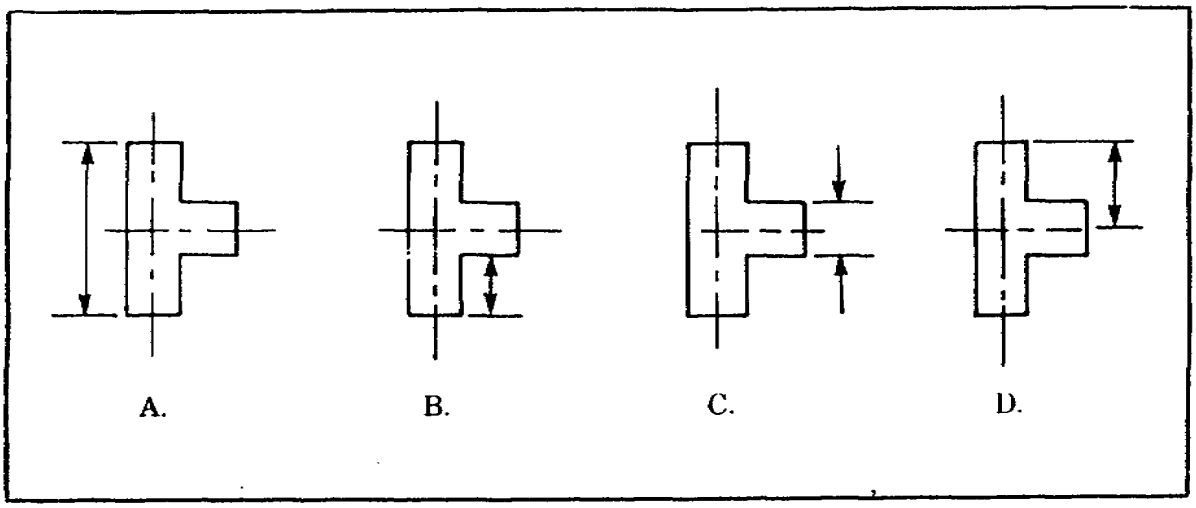

4. Refer to the illustration below. What is the length of the; 1/4-inch pipe when you are using a center-to-center measurement?

   A. 48 1/4 inches

   B. 45 inches

   C. 44 1/4 inches

   D. 43 3/4 inches

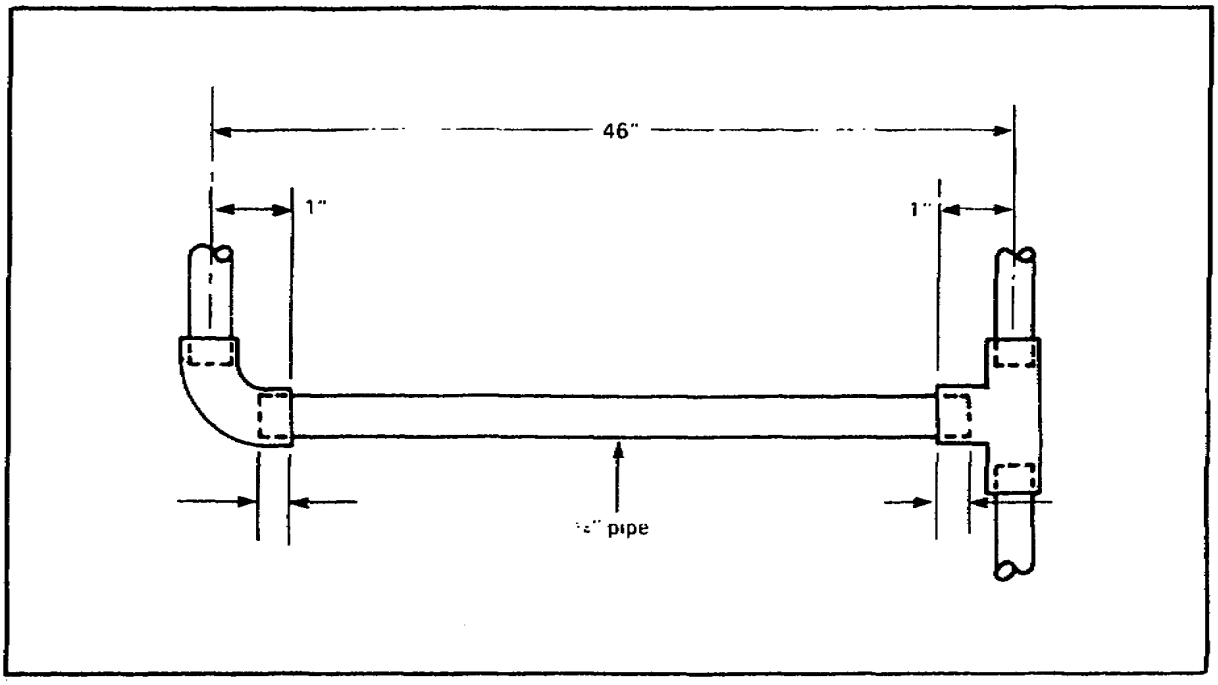

5. Refer to the illustration below. To cut a galvanized steel pipe, you should turn the cutter handle clockwise one-quarter turn after how many revolution(s)?

   A. 2

   B. 1 1/2

   C. l

   D. 1/2

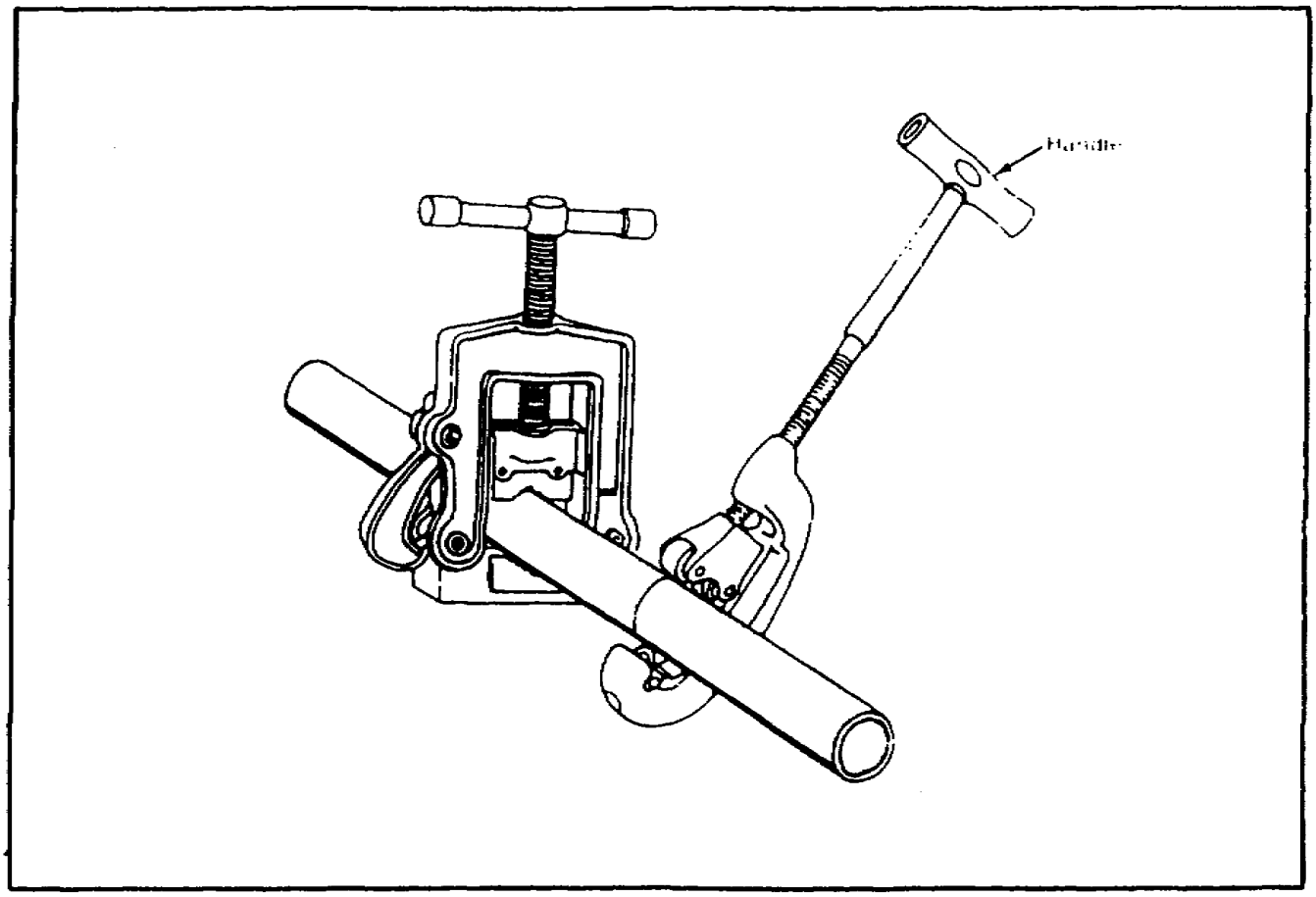

6. Refer to the illustration below. How much thread must you extend beyond the die stock to completely thread the pipe's end?

   A. 1/8 inch

   B. 1/4 inch

   C. 1/2 inch

   D. 5/8 inch

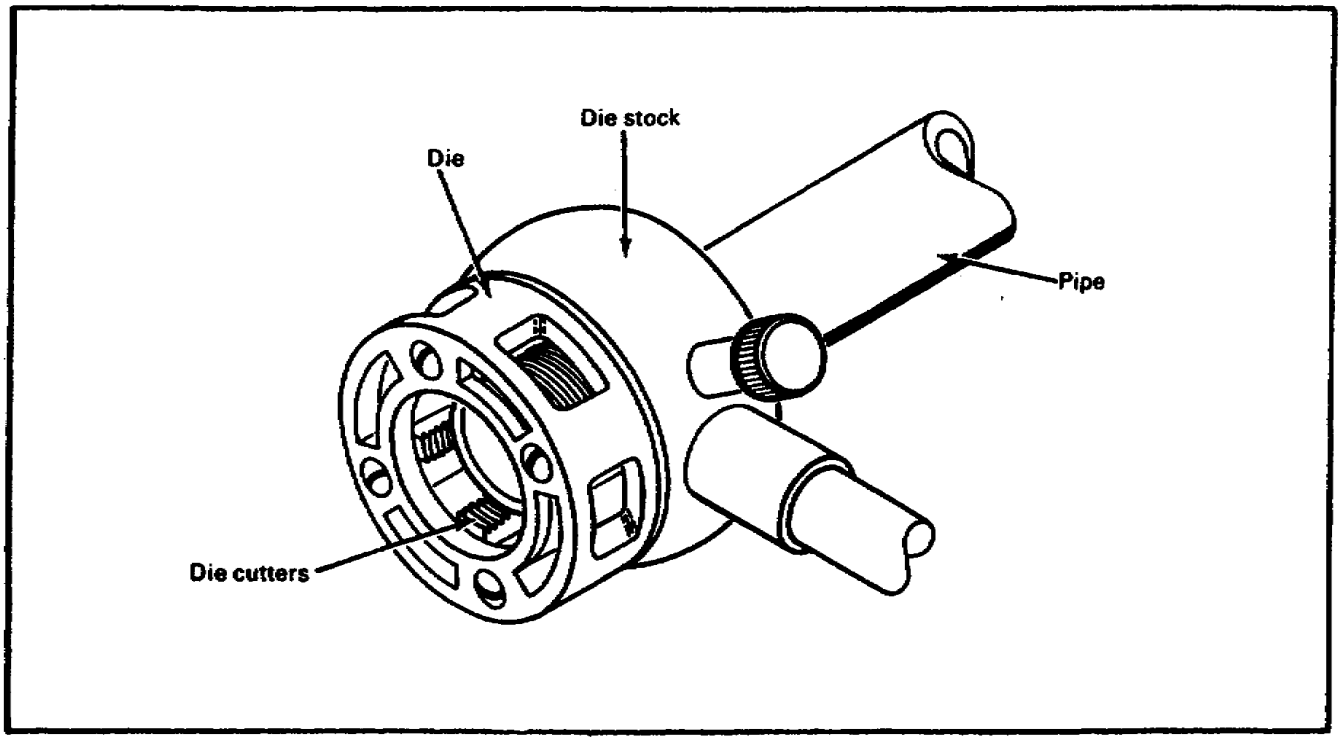

7. What should you use to clean a rigid copper pipe’s ends to a bright shine?

   A. Wire brush

   B. Blitz cloth

   C. Emery cloth

   D. Waste cloth

8. What two tools should you use to flare the ends of a flexible copper tubing?

   A. Swaging and flanging

   B. Flaring and swaging

   C. Flanging and flaring

   D. Flaring and swatting

9. What type of saw should you use to cut a rigid plastic pipe?

   A. Coping saw

   B. Rip saw

   C. Crosscut saw

   D. Hacksaw

10. What should you use to remove the gloss on the ends of a rigid plastic pipe?

   A. Emery cloth

   B. Steel wool

   C. Sandpaper

   D. Knife

Lesson 1/Review Exercise

REVIEW EXERCISE SOLUTIONS

1. A. Galvanized steel (pages 3 and 4)

   B. Copper tubing

   C. Plastic

Note. The order of the answers in question 1 is not important.

2. B (page 5)

3. D (page 6)

4. B (pages 9 and 10)

5. C (page 13)

6. B (page 14)

7. C (page 18)

8. C (page 20)

9. D (page 23)

10. C (page 24)

Lesson 2
ROUGH-IN WATER SUPPLIES AND LINES

OBJECTIVE
At the end of this lesson you will be able to describe the procedures to connect, install, and support a rough-in water pipeline system.

TASK
051-248-1002, Install steel, plastic and copper pipe.

CONDITIONS
You will be given the material in this subcourse.

STANDARDS
You should be able to study the lesson resources, answer the practice exercises, and select the correct response for each examination question. To demonstrate competency of the task(s), you must achieve a minimum of 70 percent on the subcourse examination.

CREDIT HOURS
8.

REFERENCES
TM 5-551K and FM 5-51K 1/2.

Learning Event 1
INSTALLING STOPS (VALVES)

A water supply service starts outside the building at the water main and then enters the building. Tap the water main with a self-tapping machine and lay a water service line with stops (valves) to enter the building in the basement or crawl space.

The water supply service water line to a building has three stops: corporation, curb, and meter.

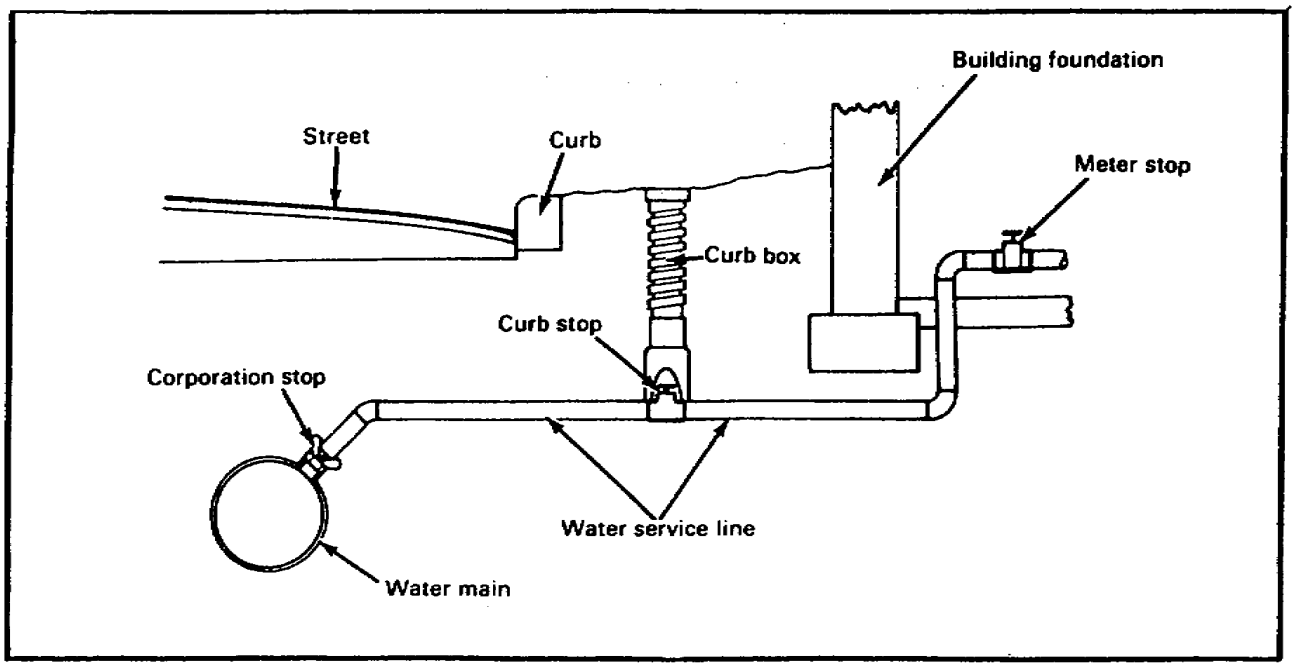

Install a Corporation Stop.

Dig to expose the pipe at the point where the tap is to be made. This should be as near the top of the water main as possible.

Clean all dirt and rust off the pipe at that point.

Place the gasket of the water main self-tapping machine on the pipe and set the saddle of the machine on the gasket.

Wrap the chain around the pipe and tighten it to clamp the water main self-tapping machine to the pipe.

Remove the cap from the cylinder of the machine and place the combination drill and tap of the desired size in the boring bar.

Reassemble the machine by putting the boring bar through the cylinder and tightening the cap.

Open the flap valve between compartments.

Drill the hole by applying pressure at the feed yoke and turning the ratchet handle until the drill enters the main. (When the tap starts threading the hole, back off the feed yoke to prevent stripping the threads.)

Turn the boring bar until the ratchet handle can no longer be turned without extra force.

Remove the tap from the hole by reversing the ratchet and back the boring bar out by turning in a counterclockwise direction.

Close the flap valve between the upper and lower compartments.

Drain the water from the cylinder through the bypass.

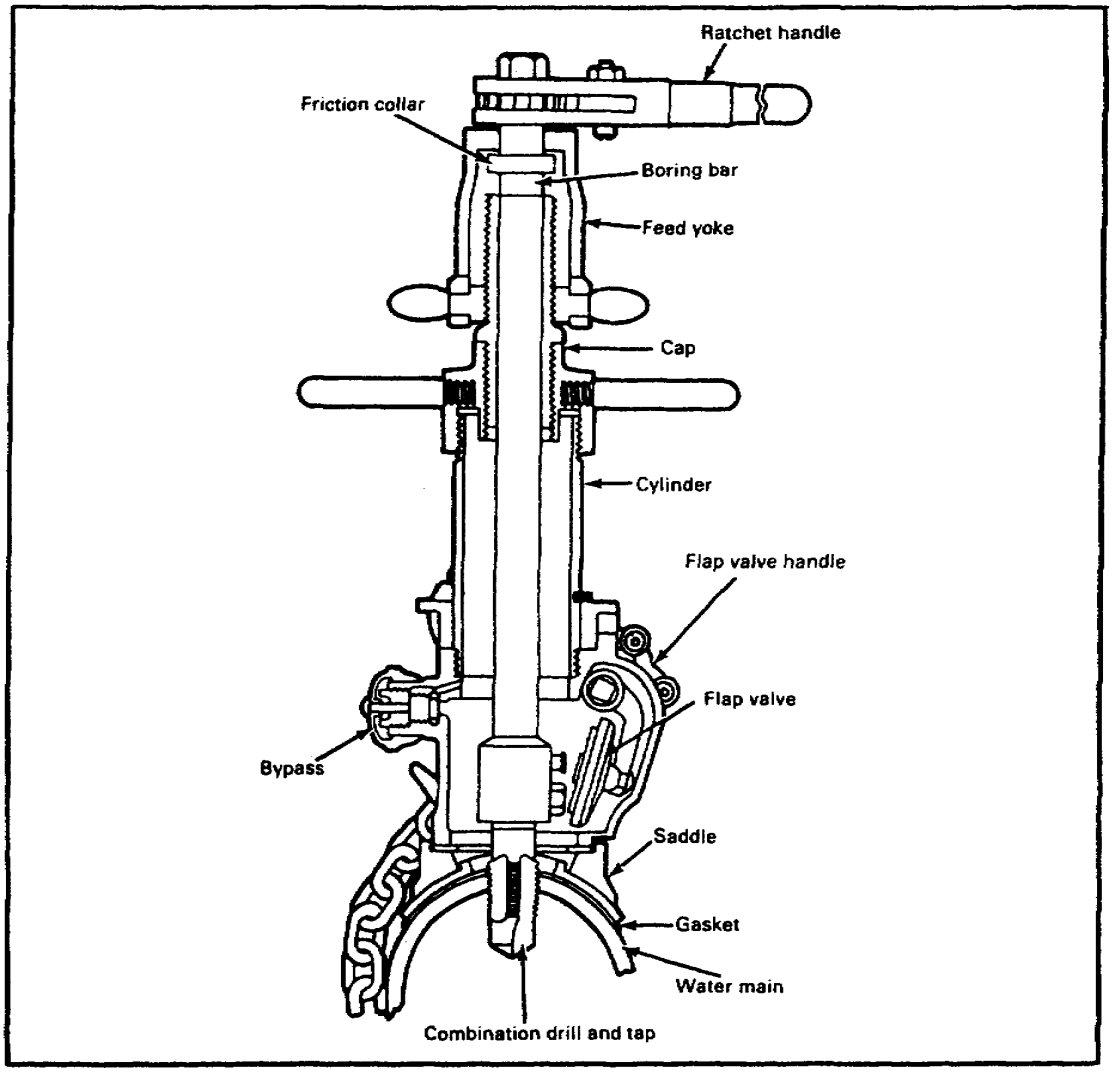

Remove the cap and drill tool, and place a corporation stop of the desired size in the boring bar. The corporation stop should be closed.

Reassemble the machine by putting the boring bar through the cylinder and tightening the cap.

Open the flap valve between compartments.

Turn the ratchet handle to screw the corporation stop into the pipe.

Drain the water from the cylinder through the bypass.

Remove the cap from the cylinder and unbolt the boring bar from the corporation stop.

Remove the lower chamber from the pipe.

Inspect the installation for leaks.

Tighten the corporation stop with a suitable wrench if it leaks.

Install a Curb Stop.

Position the curb stop in a suitable place between the curb and the building.

Set the curb stop in a cast-iron stop box that has a variable telescopic length.

Note. The curb stop provides a shutoff of water supply outside a building.

Install a Meter Stop.

Place the meter stop as near as possible to where the water service pipe enters the building.

Position the water meter near the meter stop valve.

Open the stop valve to measure the amount of water being used in the building

Note. The meter stop controls the flow of water into a building.

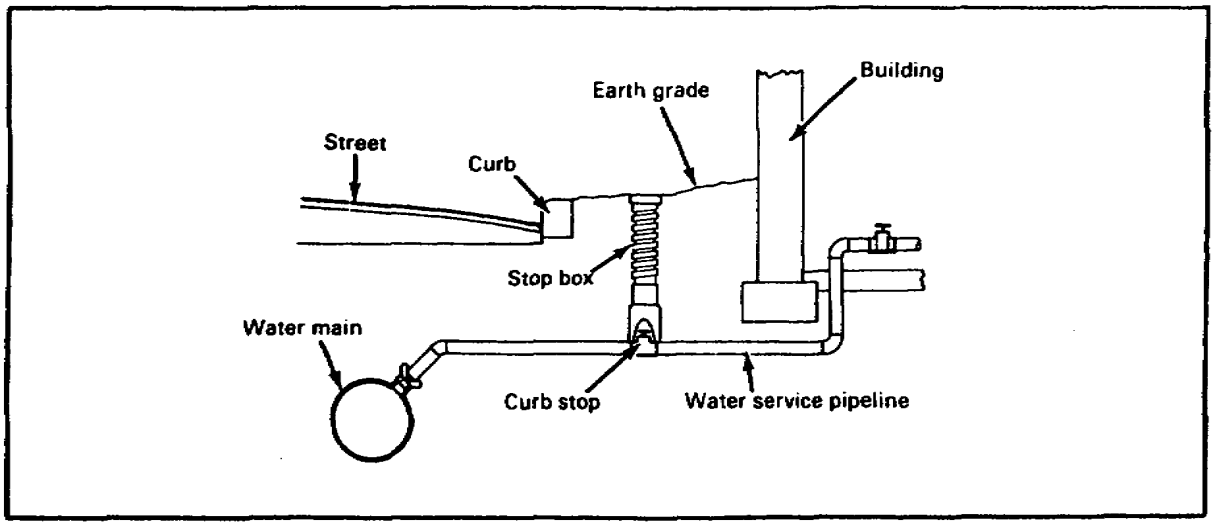

SELF-CHECK EXERCISE

Fill in the blanks with your answers.

1. List the three types of stops that are installed between the water main and the building.
   A.
   B.
   C.

2. The _____ stop shuts off or controls the amount of water flow into a building.

3. The _____ stop shuts off the water supply outside of the building.

Lesson 2/Learning Event 1

SELF-CHECK EXERCISE SOLUTIONS

Your answer should be-

1. A. Corporation
   B. Curb
   C. Meter

Note. The order of the answers in question 1 is not important

2. Meter

3. Curb

If your answers are correct, GREAT. Continue on with the lesson. If not, go back and review the material.

Learning Event 2
USING FITTINGS ON PIPE RUNS

In a building, install pipe runs with fittings to join and change the direction of the water flow. The fittings-to-pipe connections must be leakproof.

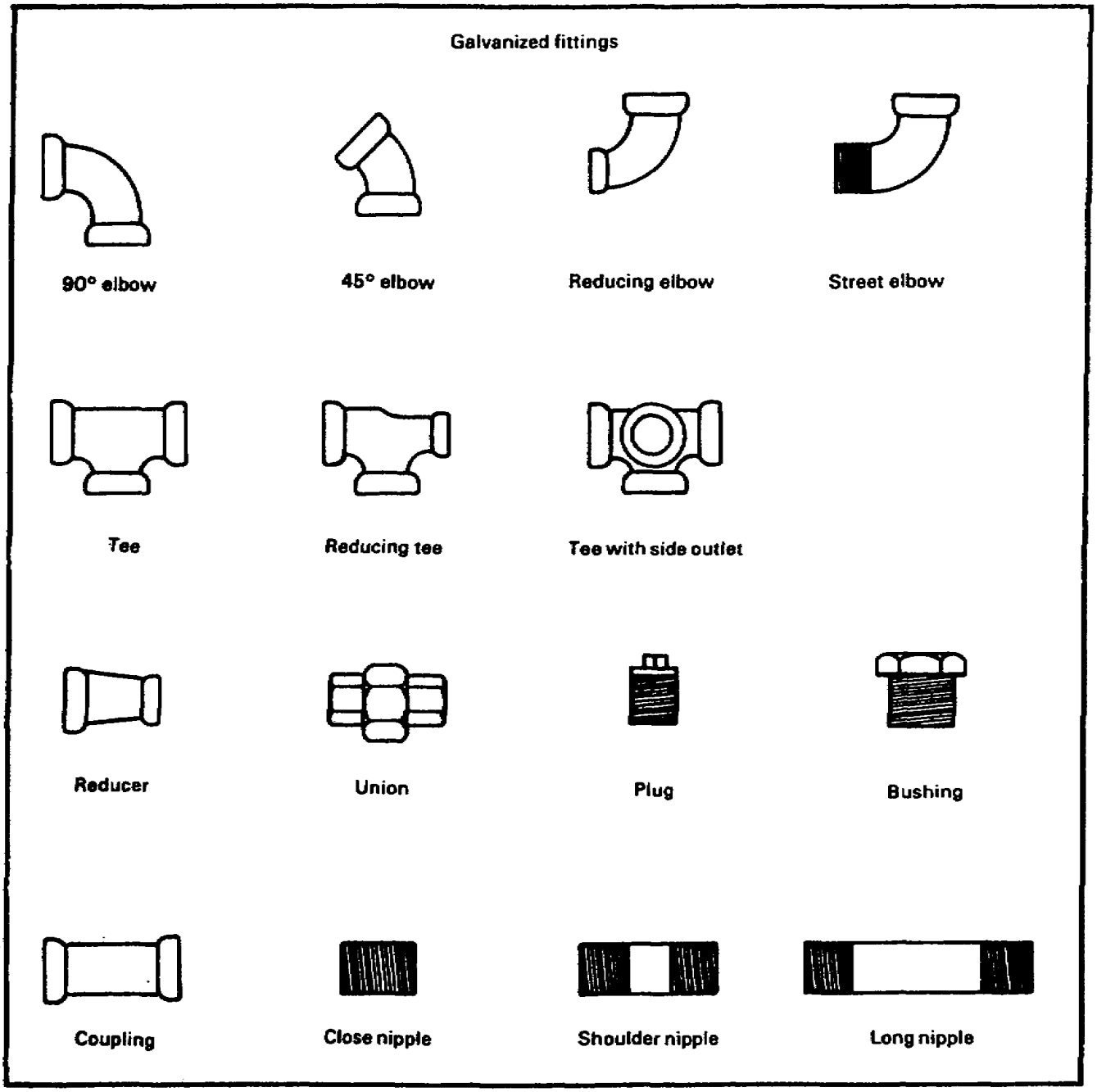

Lesson 2/Learning Event 2

Preparing Tube Joints.

Apply compound to pipe threads only. Screw the fitting clockwise by hand. Tighten with a pipe wrench (wipe off excess compound).

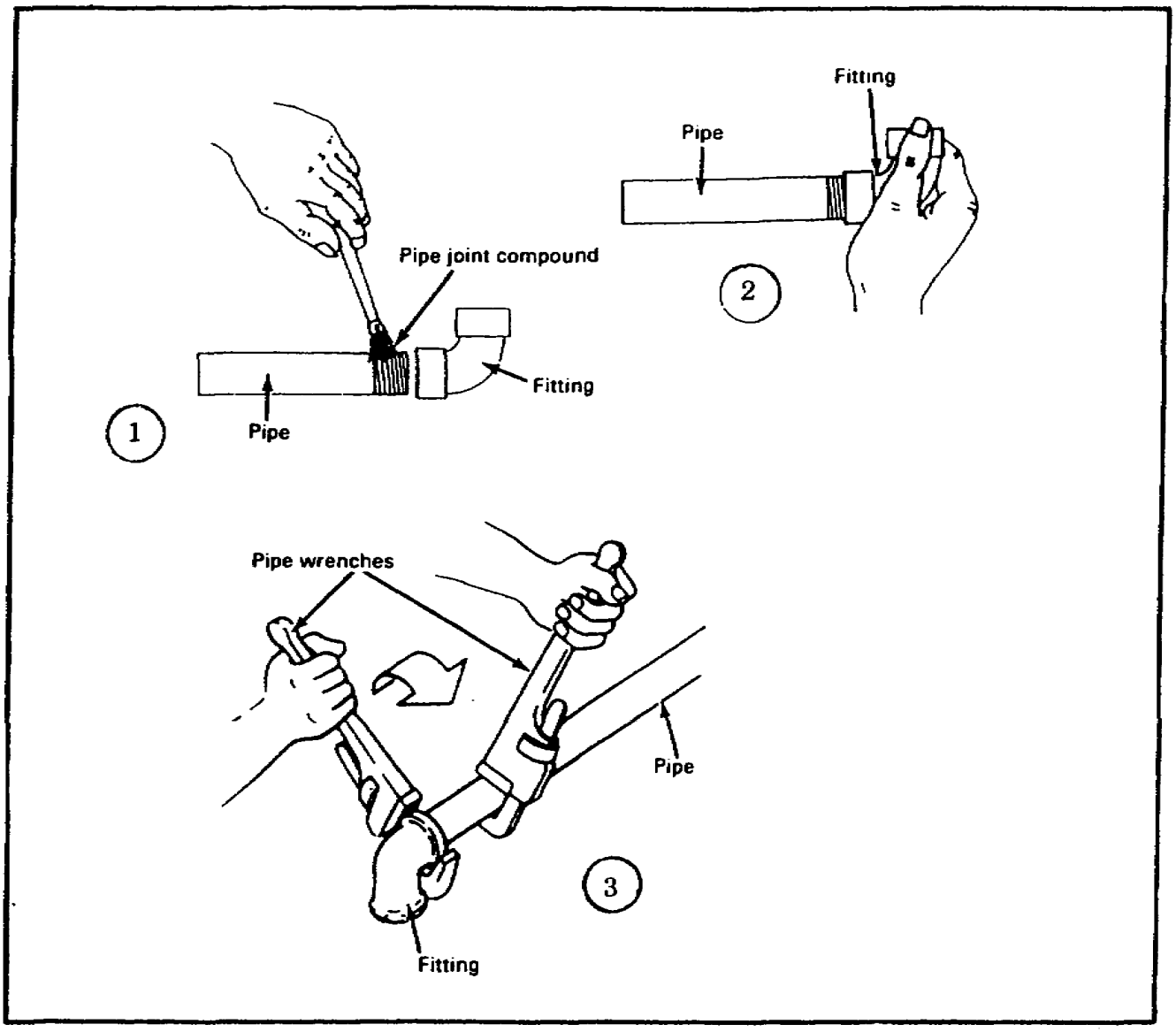

SELF-CHECK EXERCISE

1. Match each galvanized pipe fitting with its name.

   A. Reducer

   B. Union

   C. Tee

   D. Forty-five degree elbow

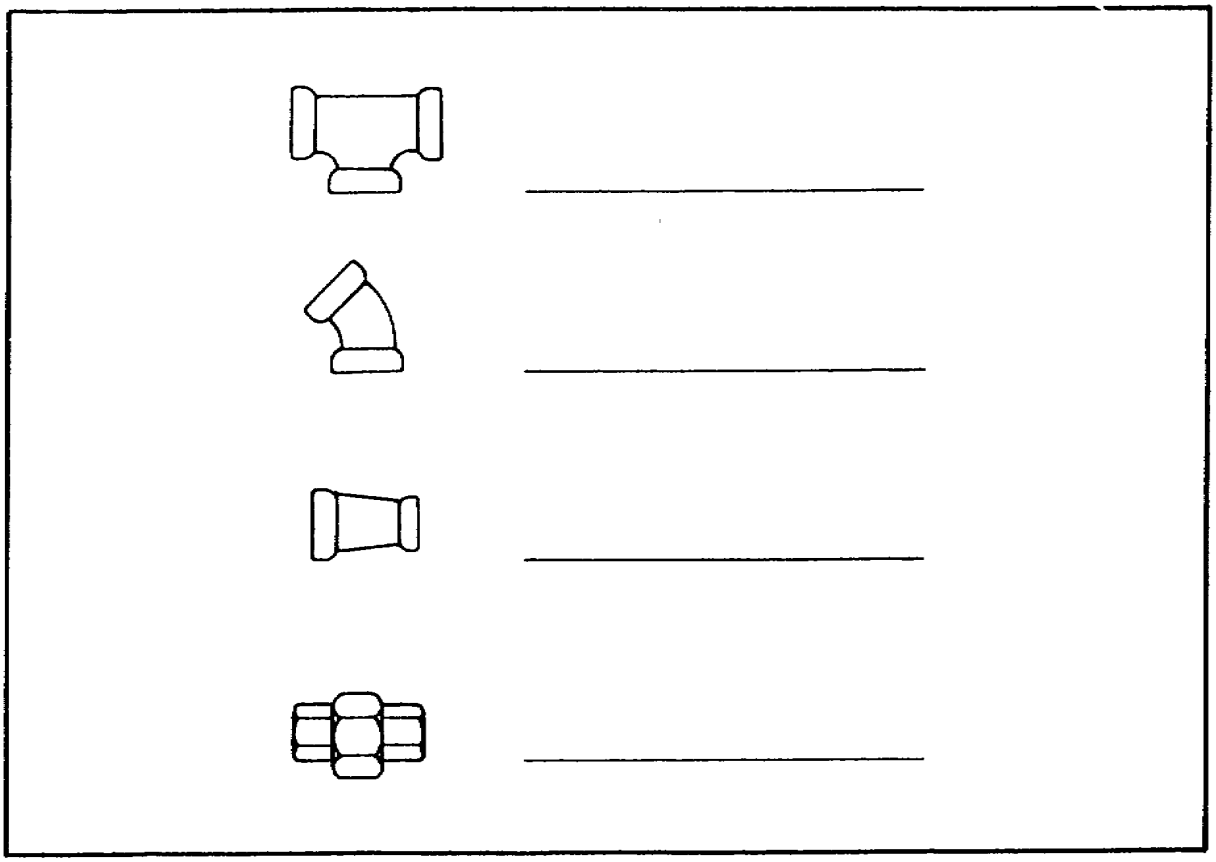

Fill in the blanks with your answers.

2. A galvanized pipe threaded joint connection with a fitting requires that _____ be applied only to the _____.

3. Screw the fitting on the pipe until it is _____.

4. Tighten the fitting by using two _____.

Lesson 2/Learning Event 2

SELF-CHECK EXERCISE SOLUTIONS
Your answers should be-

1. C, Tee
   D, Forty-five degree elbow
   A, Reducer
   B, Union

2. Pipe joint compound, pipe threads

3. Hand tight

4. Pipe wrenches

If your answers are correct, GREAT. Continue on with learning event 2. If not, go back and review the material.

Preparing Joints for Copper Fittings.

The various types of copper tubing fittings for soldered and flared joints are shown below.

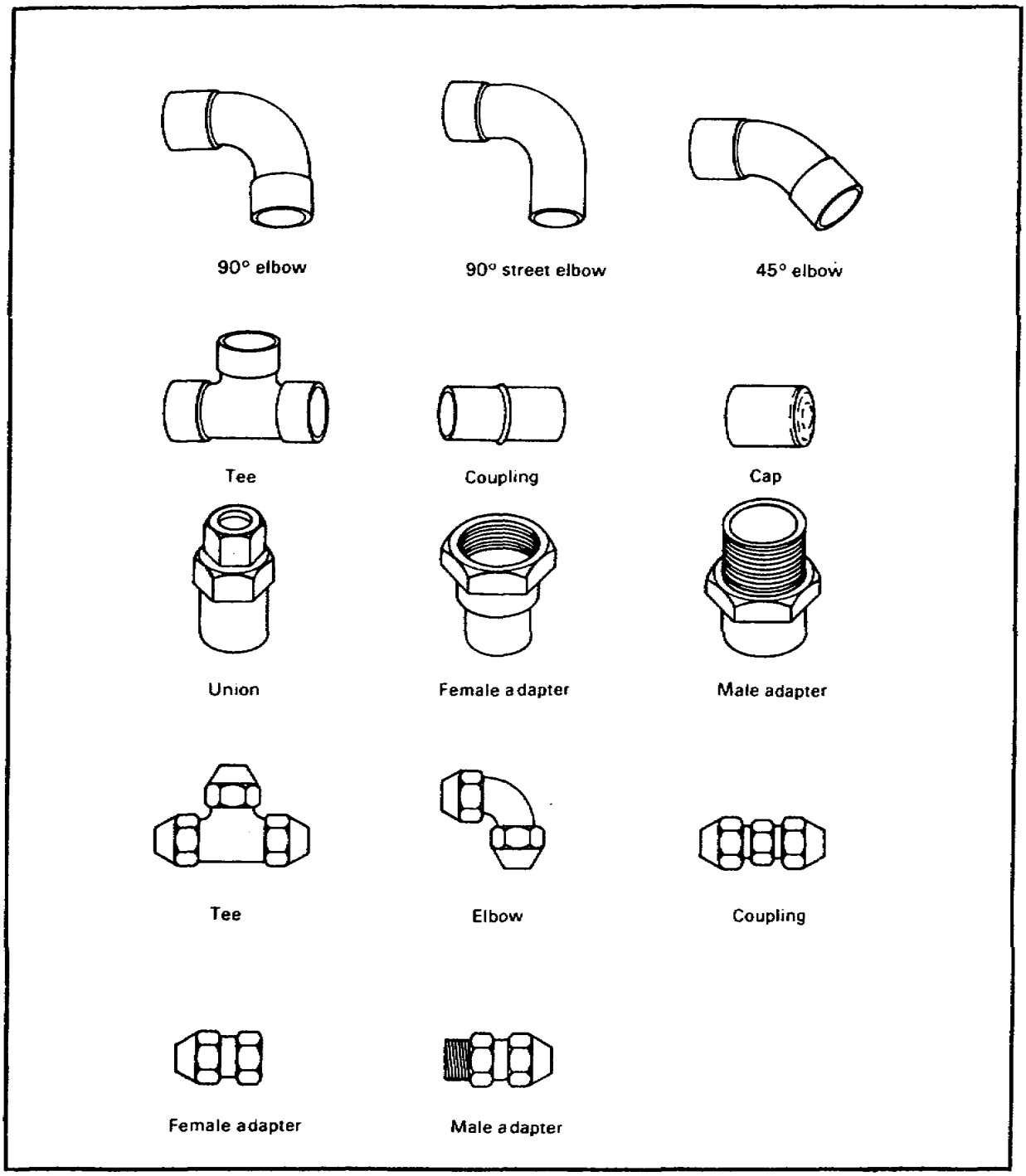

Lesson 2/Learning Event 2

Preparing Copper Tube Joints (Rigid).

Flux completely around the outside end of the tubing and the inside end of the fitting.

Place fitting on tubing. Use a quarter turn to spread the flux evenly.

Heat fitting with a torch until flux bubbles. Place solder on the connection until beads form completely around the edge of the fitting.

Clean the joint with a wet cool rag.

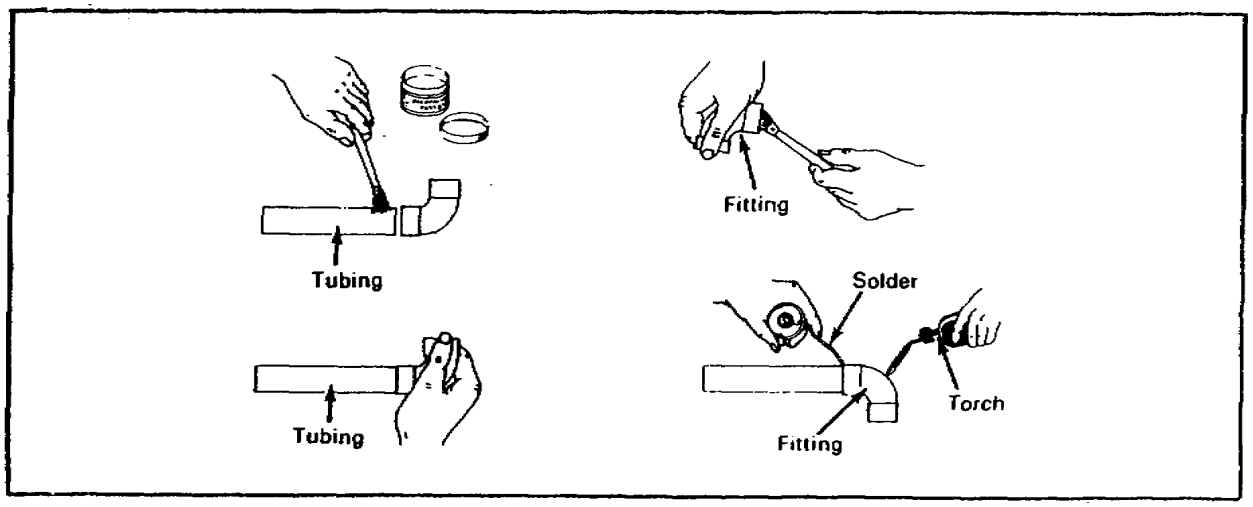

Flared Joints.

Place flange nut over the cut end of tubing with threads facing the cut end; then flare the tubing at the cut end.

Screw the flange nut on the fitting by hand.

Tighten the screw using two wrenches, one on the fitting and one on the flange nut.

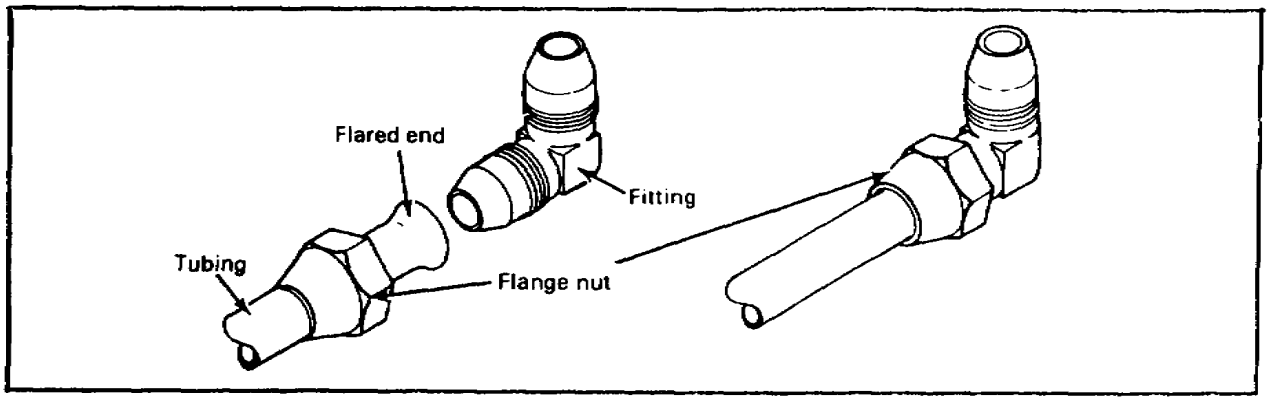

Preparing Copper Tube Fittings (Flexible).

Insure tubing is cut square.

Slide compression nut and ring onto tubing. *SLIDE* fitting onto tubing.

Hold compression nut and ring against the fitting and turn the nut clockwise until it holds.

Tighten the compression joint with wrenches, using one wrench on the nut and one wrench on the fitting.

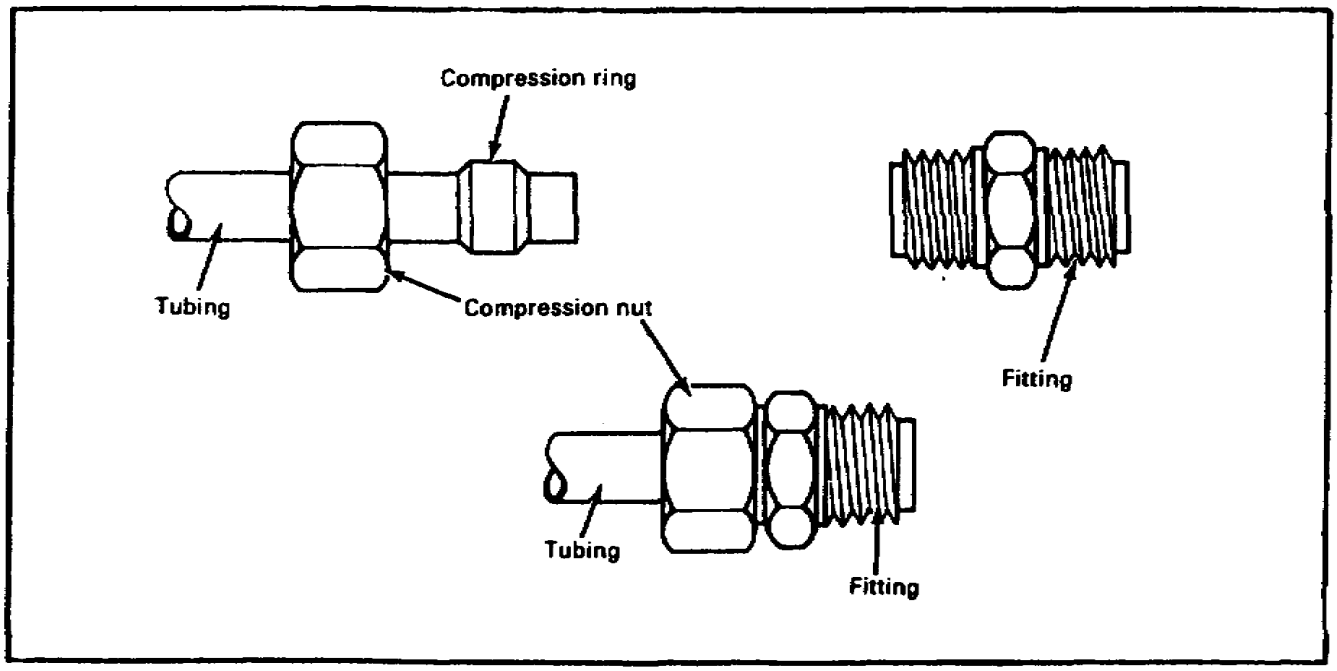

Lesson 2/Learning Event 2

SELF-CHECK EXERCISE

1. Match each soldered fitting with its name.

   A. Male adapter

   B. Coupling

   C. Tee

   D. Female adapter

   E. Ninety-degree elbow

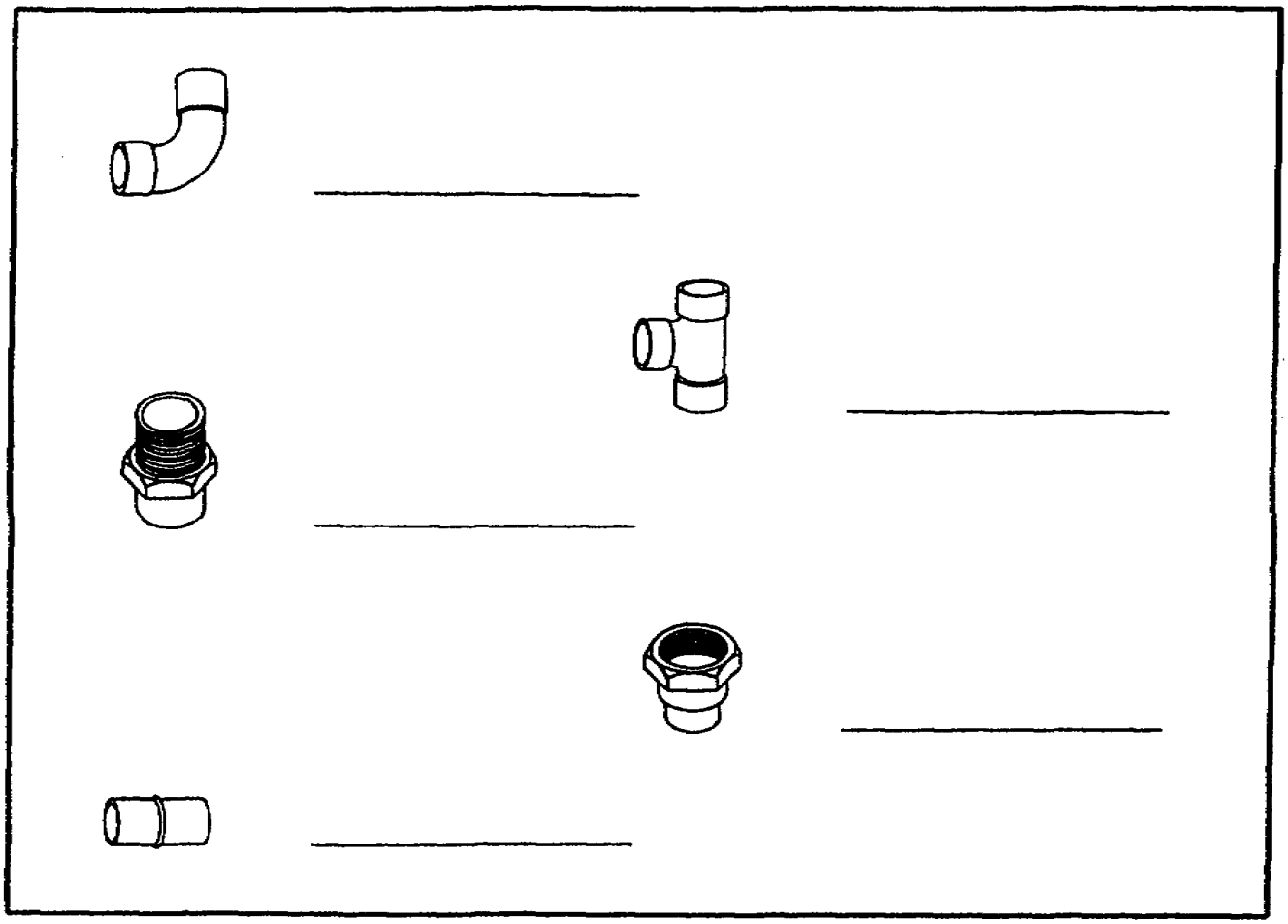

2. Match each flared fitting with its name.

   A. Elbow

   B. Male adapter

   C. Tee

   D. Coupling

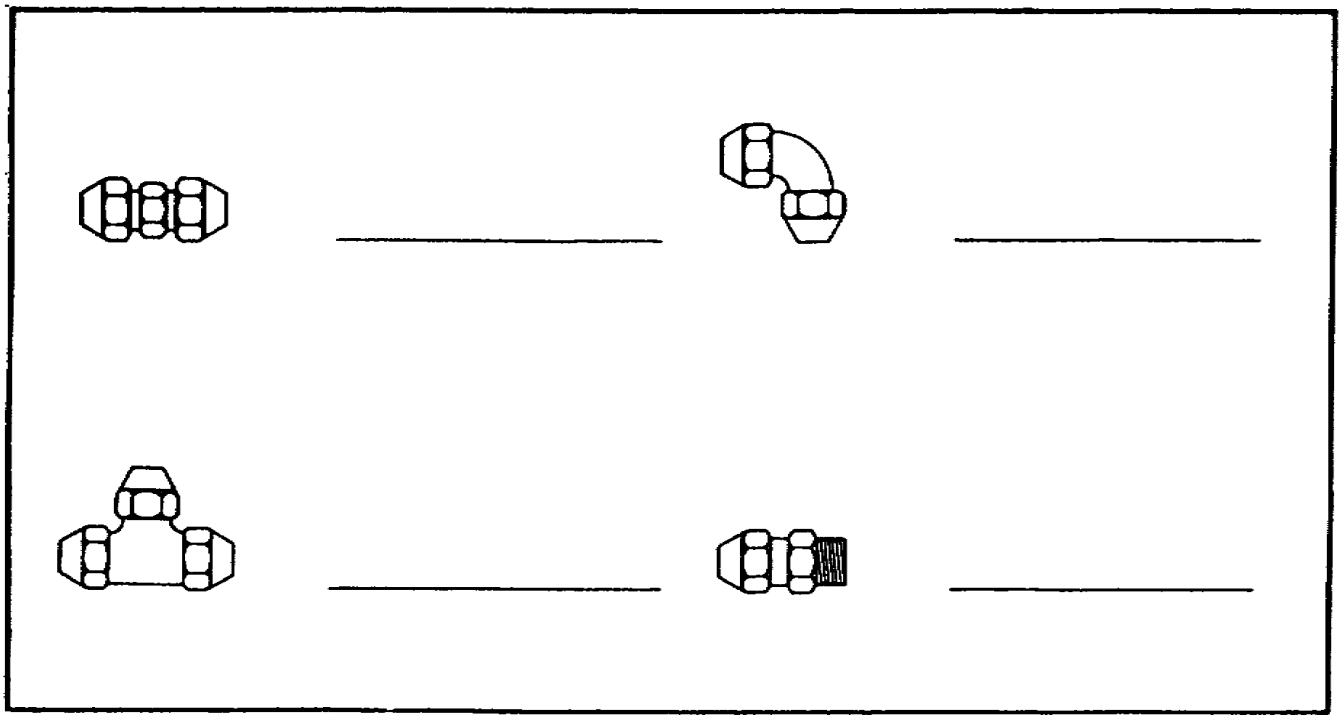

Fill in the blanks with your answers.

3. To prepare a joint connection with a copper tubing, you should apply soldering flux to the _____ and to the _____.

4. To make a soldered joint with a rigid copper tubing, you should apply the heat from a torch only to the _____.

5. _____ joints and _____ joints are made by using flexible copper tubing.

Lesson 2/Learning Event 2

SELF-CHECK EXERCISE SOLUTIONS

Your answers should be-

1. E, Ninety-degree elbow

   A, Male adapter

   B, Coupling

   C, Tee

   D, Female adapter

2. D, Coupling

   C, Tee

   A, Elbow

   B, Male adapter

3. Outside end of the pipe, inside of the fitting

4. Fitting

5. Flared, compression

If your answers are correct, GREAT. Continue on with learning event 2. If not, go back and review the material.

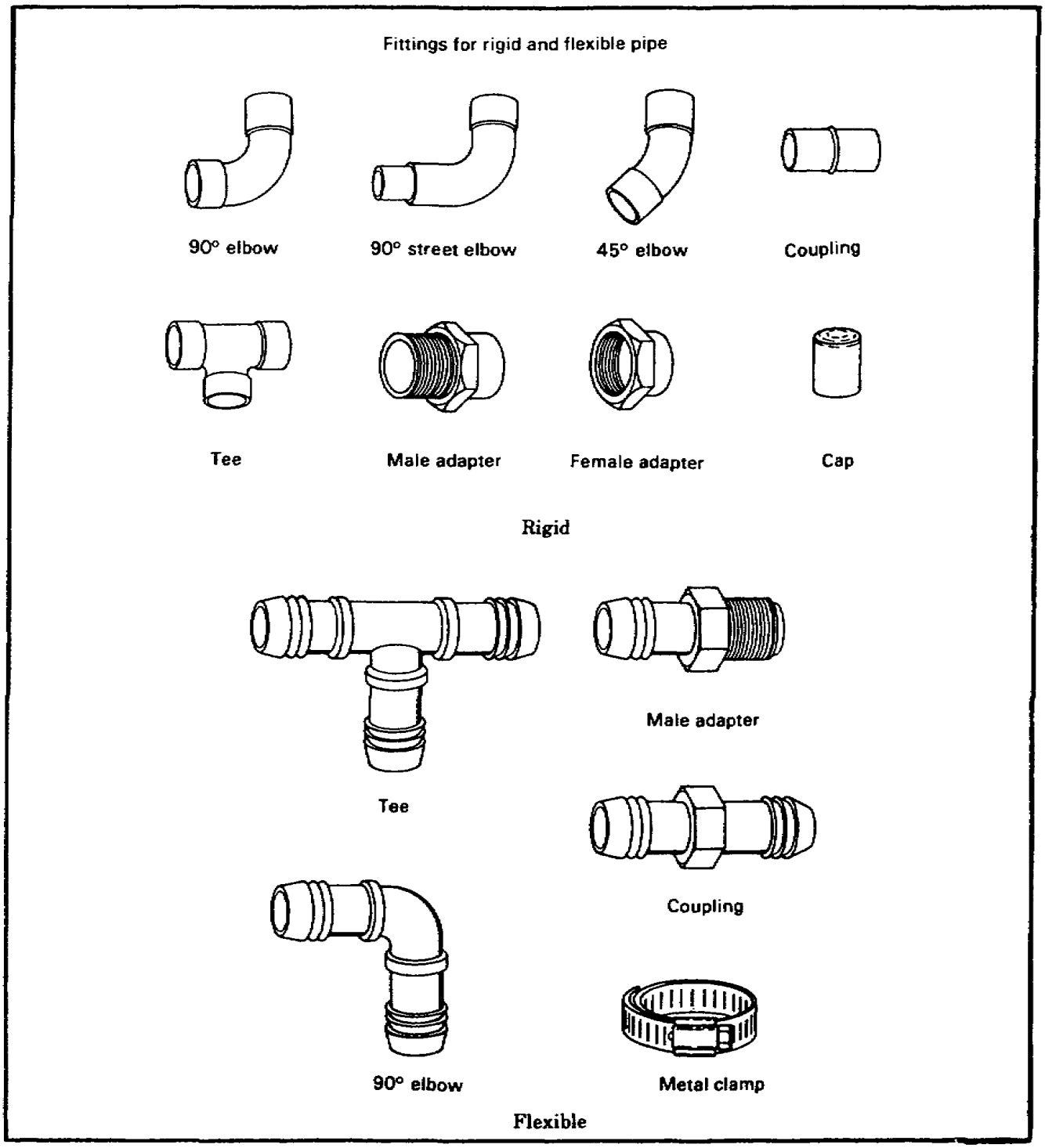
Fittings for rigid and flexible pipe
90° elbow
90° street elbow
45° elbow
Coupling
Tee
Male adapter
Female adapter
Cap
Rigid
Tee
Male adapter
Coupling
90° elbow
Metal clamp
Flexible

Lesson 2/Learning Event 2

Attaching Fittings to Rigid Plastic Pipes to Form Solvent Welded Joints.

Swab the solvent weld cement around the outside of the pipe end.
Swab the solvent weld cement to inside of the fitting.
Push the fitting on the pipe using a quarter turn to spread the cement evenly.
Hold the fitting firmly on the pipe for about a minute.
Wipe excess cement from around fitting.

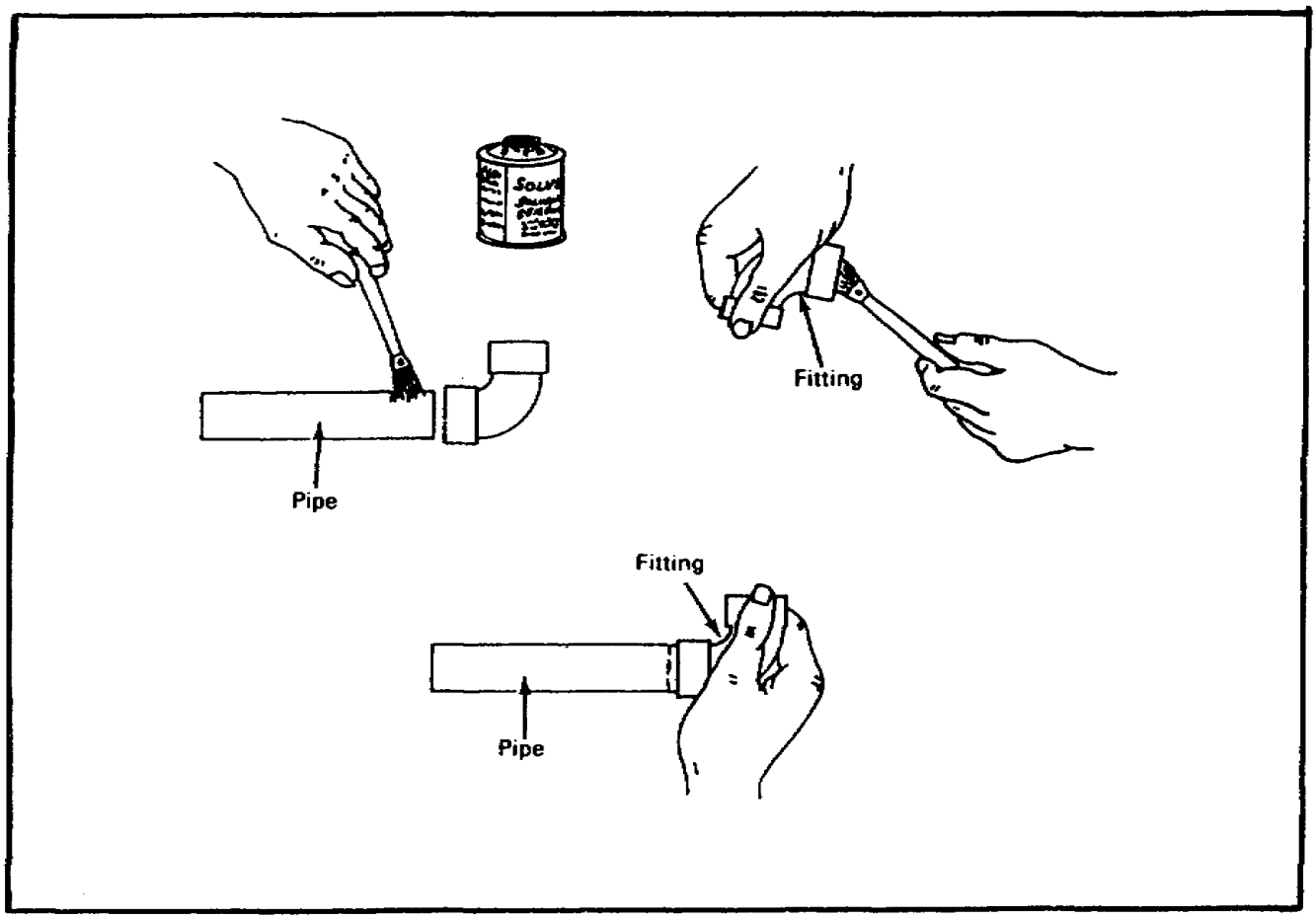

Attaching Fittings to Flexible Plastic Pipes to Form Clamped Joints.

Slide the metal clamp on the pipe.
Push the pipe on the fitting as far as it can go.
Move the clamps in place.
Tighten with a screwdriver.

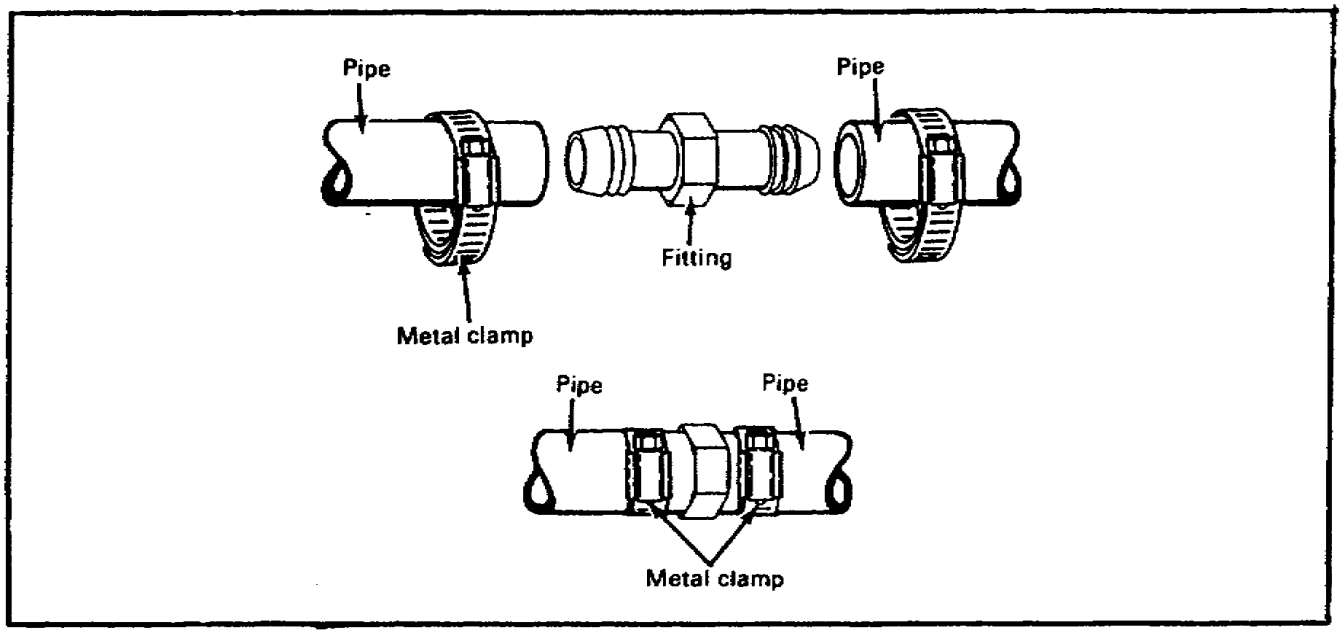

Lesson 2/Learning Event 2

SELF-CHECK EXERCISE

1. Match each rigid plastic pipe fitting with its name.

   A. Coupling

   B. Ninety-degree elbow

   C. Female adapter

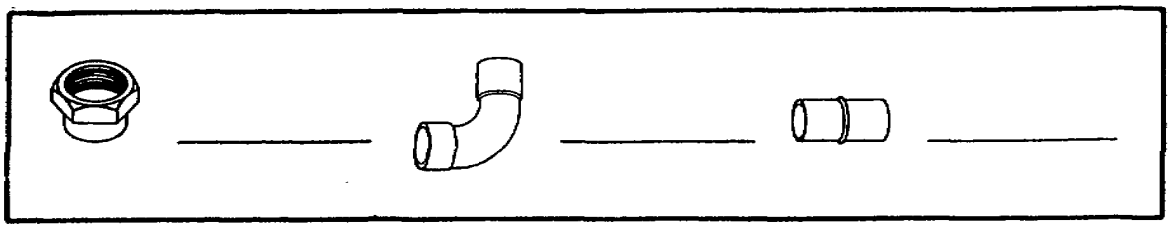

2. Match each flexible plastic pipe fitting with its name.

   A. Male adapter

   B. Coupling

   C. Ninety-degree elbow

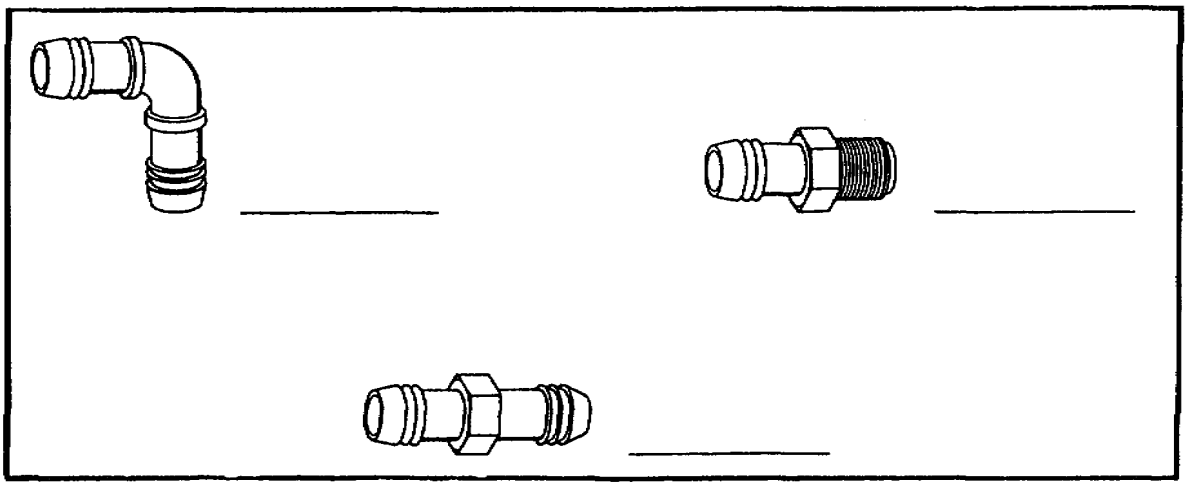

Fill in the blanks with your answers.

3. To prepare a joint connection with a rigid plastic pipe, you should apply a solvent weld cement to the _____ and to the _____.

4. To form joint connections with flexible plastic pipe, you should use _____.

SELF-CHECK EXERCISE SOLUTIONS

Your answers should be-

1. C, Female adapter
   A, Coupling
   B, Ninety-degree elbow

2. C, Ninety-degree elbow
   A, Male adapter
   B, Coupling

3. Outside end of the pipe, inside of the fitting

4. Metal clamps

If your answers are correct, GREAT. Continue on with the lesson. If not, go back and review the material.

Learning Event 3
INSTALLING WATER LINE PIPE RUNS

Install water line pipe runs during the building construction. The following steps will make it easier to rough-in pipe runs with fittings, support the pipe runs, and test the rough-in water pipe system joints for leaks. The pipe runs consist of distribution lines, branch lines, and riser lines which will service the fixtures or equipment.

Main Distribution Lines. Install this pipeline, with all fittings required for the branch lines, between or through the floor joist from the meter stop. The pipe size will be the same as the water service line.

Branch Lines. From the fittings on the distribution line, install the branch pipelines between or through the floor joist to those fixture points that the riser pipes will service.

Fixture Riser Lines. From the branch pipeline fittings, install fixture supply pipe risers by drilling holes through the sole plate or floor. Set the risers with fittings to connect the water supply. Set the air chamber to control the pipe noise.

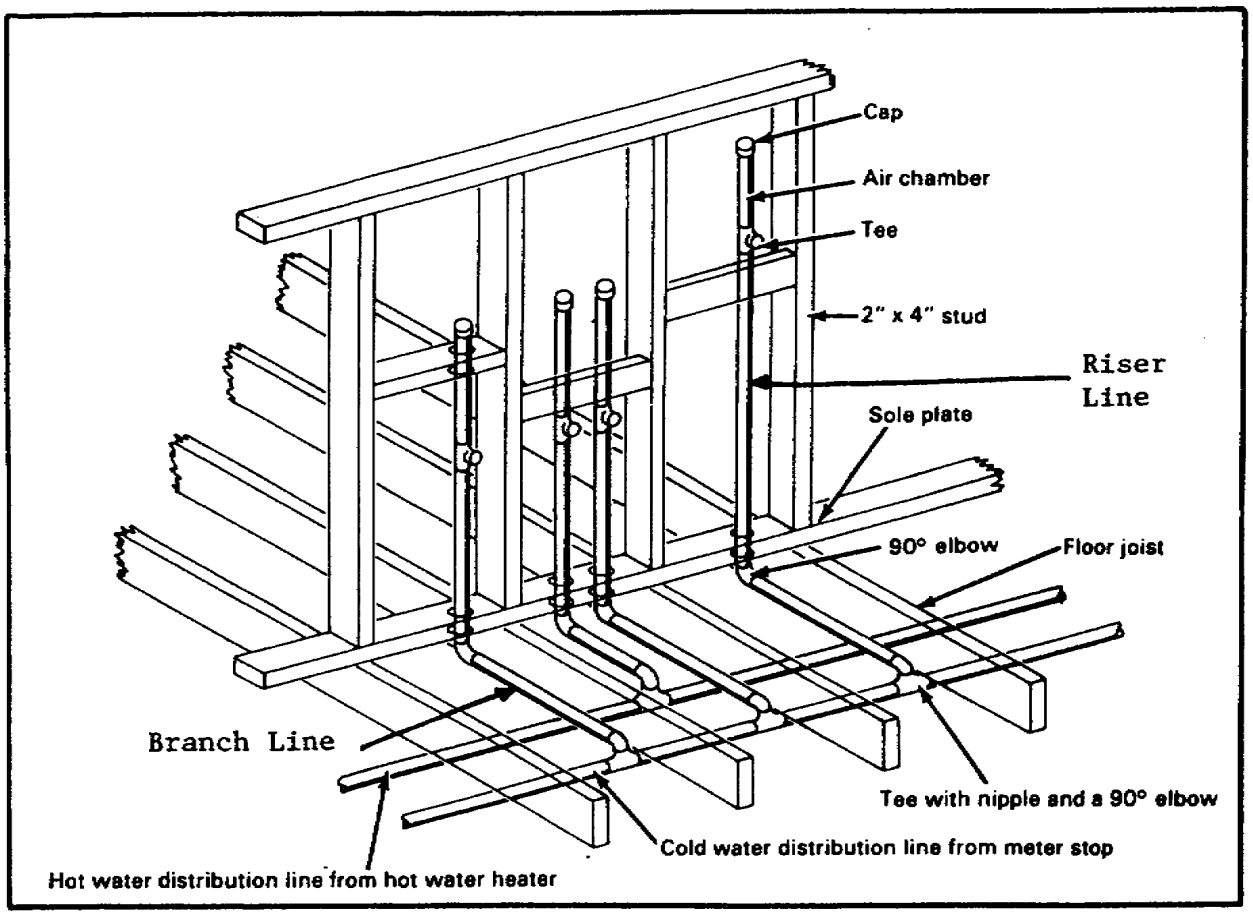

SELF-CHECK EXERCISE

1. Refer to the illustration below. List the rough-in water pipelines.

A. _____
B. _____
C. _____
D. _____
E. _____
F. _____

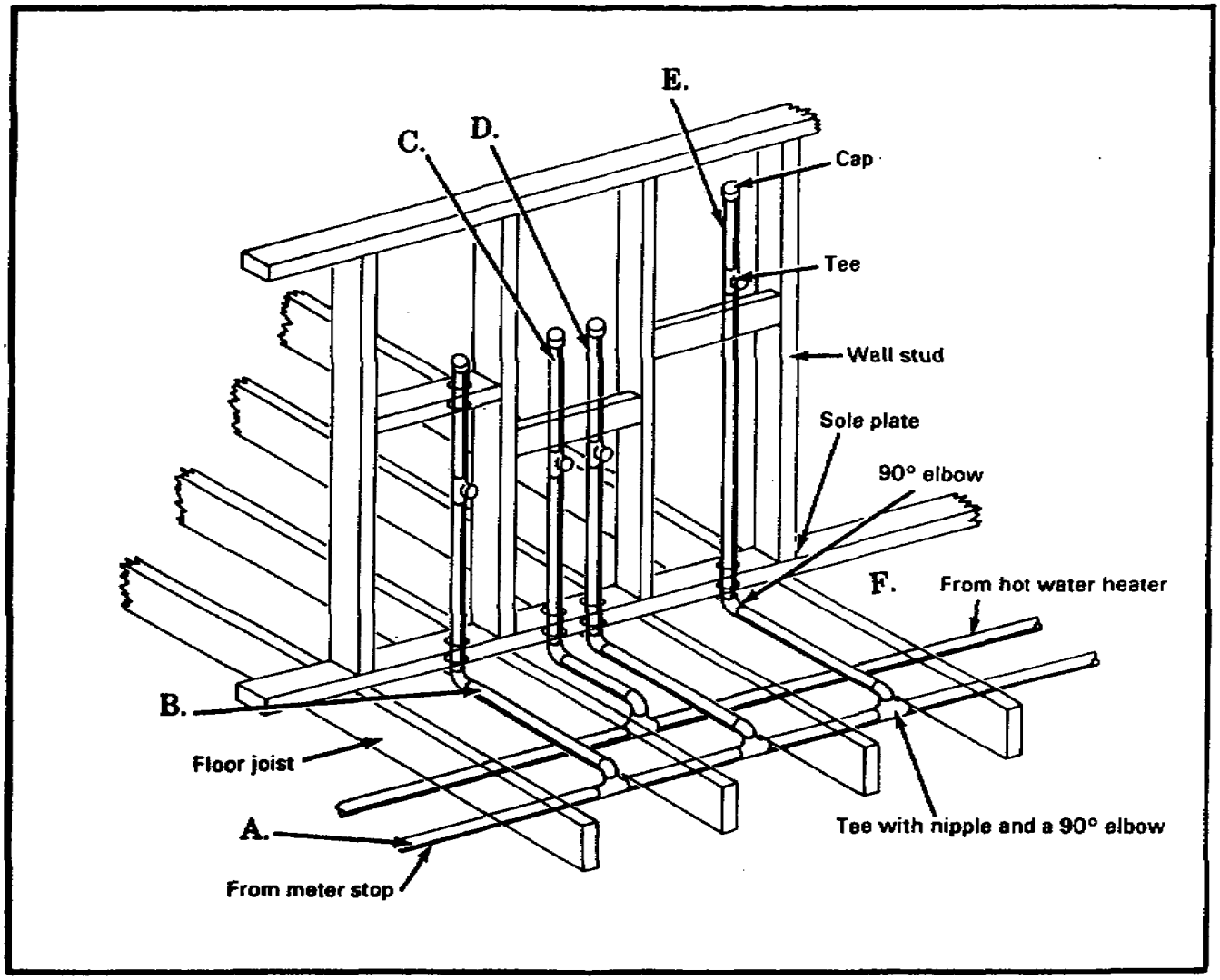

SELF-CHECK EXERCISE SOLUTIONS

Your answers should be-

A. Cold water distribution pipeline
B. Cold water branch pipeline
C. Hot water riser line for fixture
D. Cold water riser line for fixture
E. Air chamber for pipe noise control
F. Hot water distribution pipeline

If your answers are correct GREAT. Continue on with learning event 3. If not, go back and review the material.

Install Rough-In Water Lines. Drill a hole through the center of a joist. The hole cannot be larger than one quarter of the depth of the joist. Center the hole between the top and bottom of the joist. For example, if you are using a 2- by 8-inch joist, the hole cannot be any larger than 2 inches.

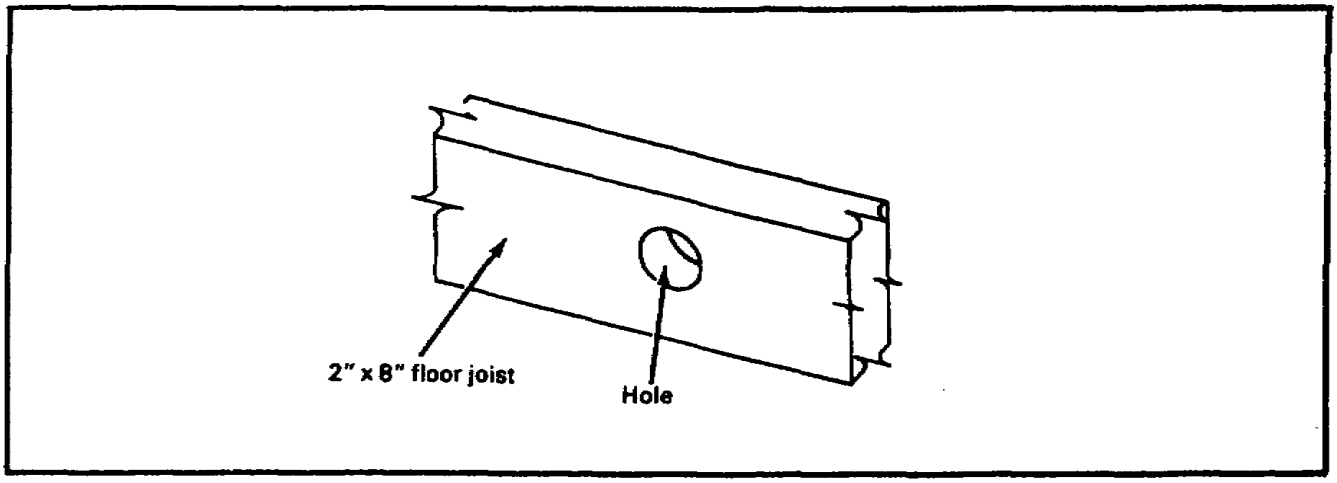

Add Notches. Notches can be at the top or bottom of a joist. The notch width should be slightly larger than the outside diameter of the pipe. The notch depth can be no more than a quarter of the joist depth. Cut both sides to the proper notch depth with a handsaw. For example, if the joist depth is 8 inches and the notch depth equals 1/4 of 8 inches, the notch depth would be 2 inches. Use a hammer and a sharp wood chisel to cut away the wood between the saw cuts.

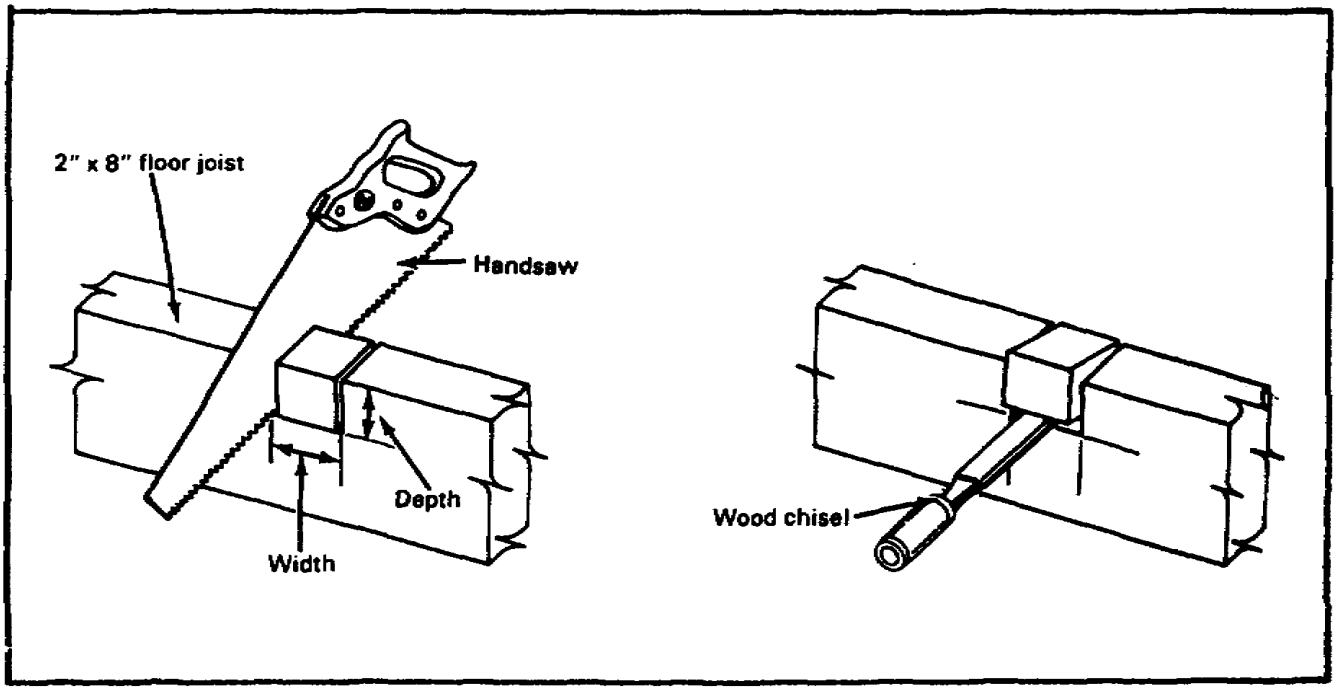

Lesson 2/Learning Event 3

Brace a Joist. With the notch cut up, place a 2- by 2-inch board on each side.

Center the Boards. Under the notch, center boards and nail in place. When the notch is cut at the bottom, center a steel plate over the notch.

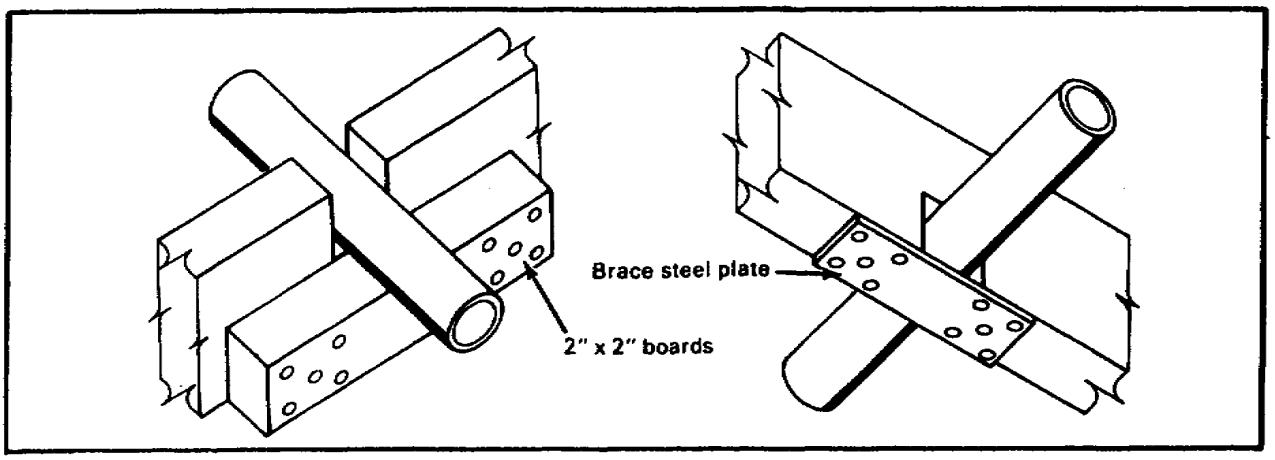

Cut a Wall Stud. Cut a notch no larger than one-third to one-half of the stud's depth.

Insure the cut-out notch is able to take the pipe size to be installed.

Measure the depth of a wall stud before cutting notches.

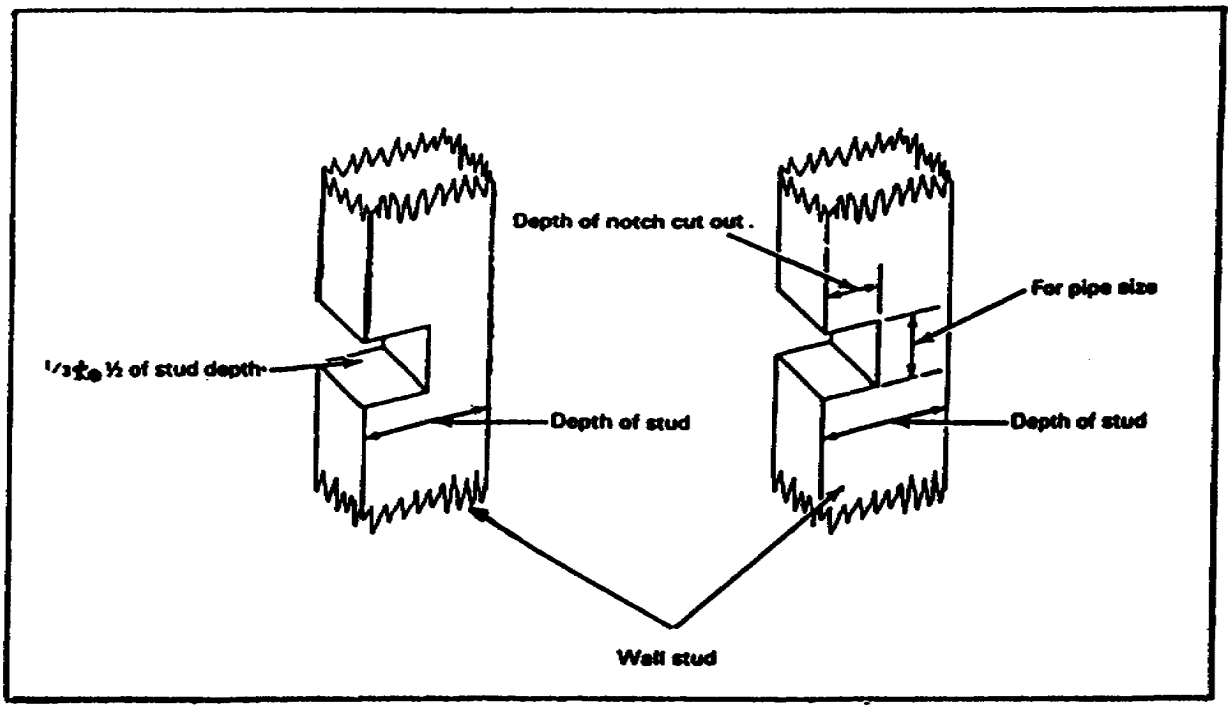

Brace Notch Cuts. When bracing notch cuts in the wall studs with pipe runs, insure the studs with the notch cuts at the top or bottom have steel plates centered over the notches.

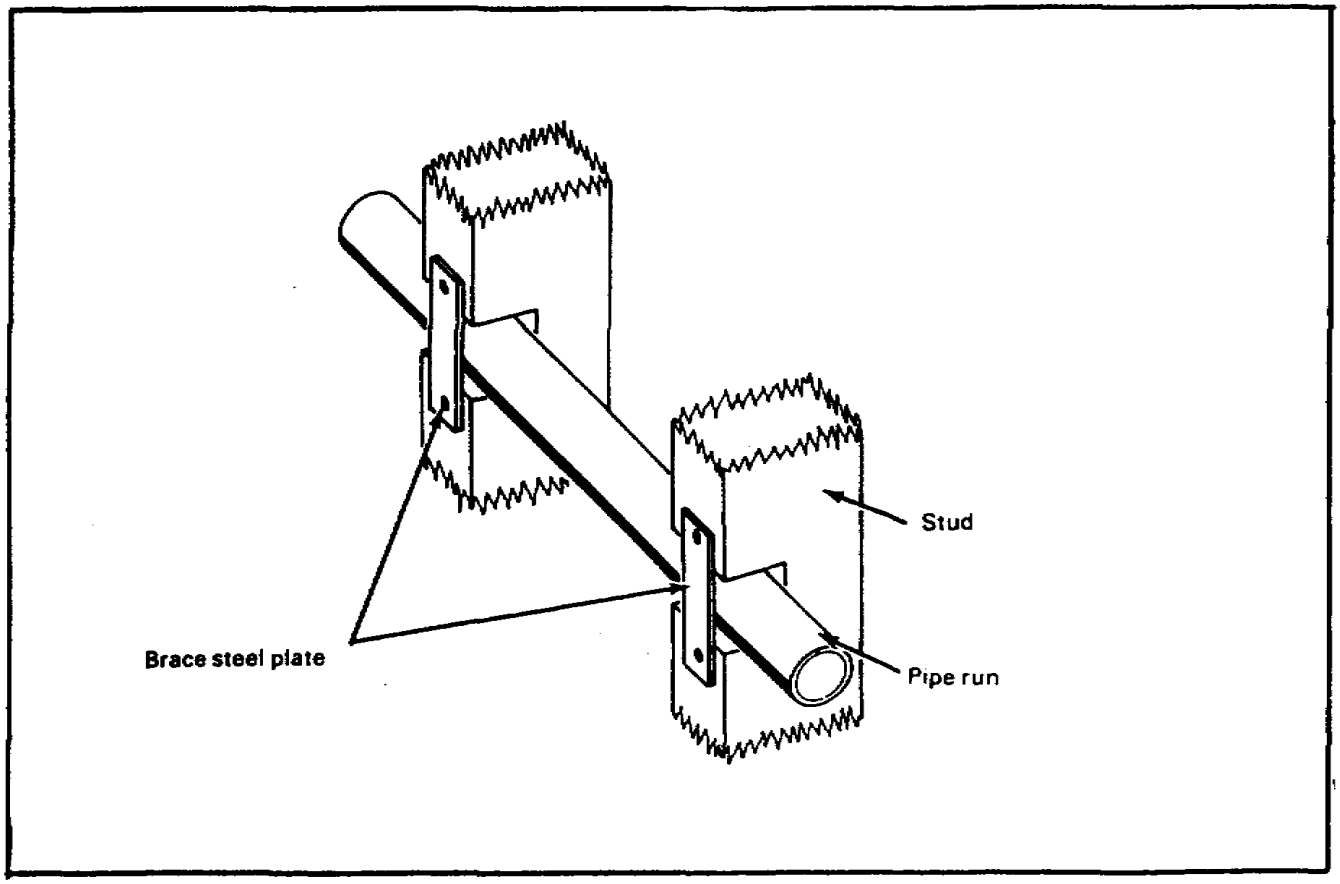

Lesson 2/Learning Event 3

SELF-CHECK EXERCISE

1. What is the largest-sized hole that can be drilled through the center of a 2- by 8-inch floor joist for a pipe run?

   A. 1 inch
   B. 2 inches
   C. 3 inches
   D. 4 inches

2. What is the maximum depth that a notch can be cut in a floor joist?

   A. 1/4 of joist's depth
   B. 1/3 of joist's depth
   C. 1/2 of joist's depth
   D. 2/3 of joist's depth

3. What is the maximum depth that a notch can be cut at the bottom of a wall stud?

   A. 1/4 of stud's depth
   B. 1/3 of stud's depth
   C. 1/2 of stud's depth
   D. 2/3 of stud's depth

Fill in the blank with your answer.

4. Brace a notch cut at the bottom of a joist or in the lower half of a wall stud with a _____.

SELF-CHECK EXERCISE SOLUTIONS

Your answers should be-

1. B, 2 inches is the largest hole that can be used
2. A, 1/4 of the joist's depth is the maximum
3. C, 1/2 of the stud's depth is the maximum
4. Steel plate

If your responses are correct, GREAT. Continue on with the lesson. If not, go back and review the material.

Learning Event 4
SUPPORTING PIPELINE RUNS

Horizontal and vertical pipeline runs with fittings must be supported. The length of the pipe runs, their locations, and the joints will determine where to place the pipe supports. There are many types of pipe supports designed to hang or support the pipe. The building material and types of pipes will in many cases determine the kind of supports to use.

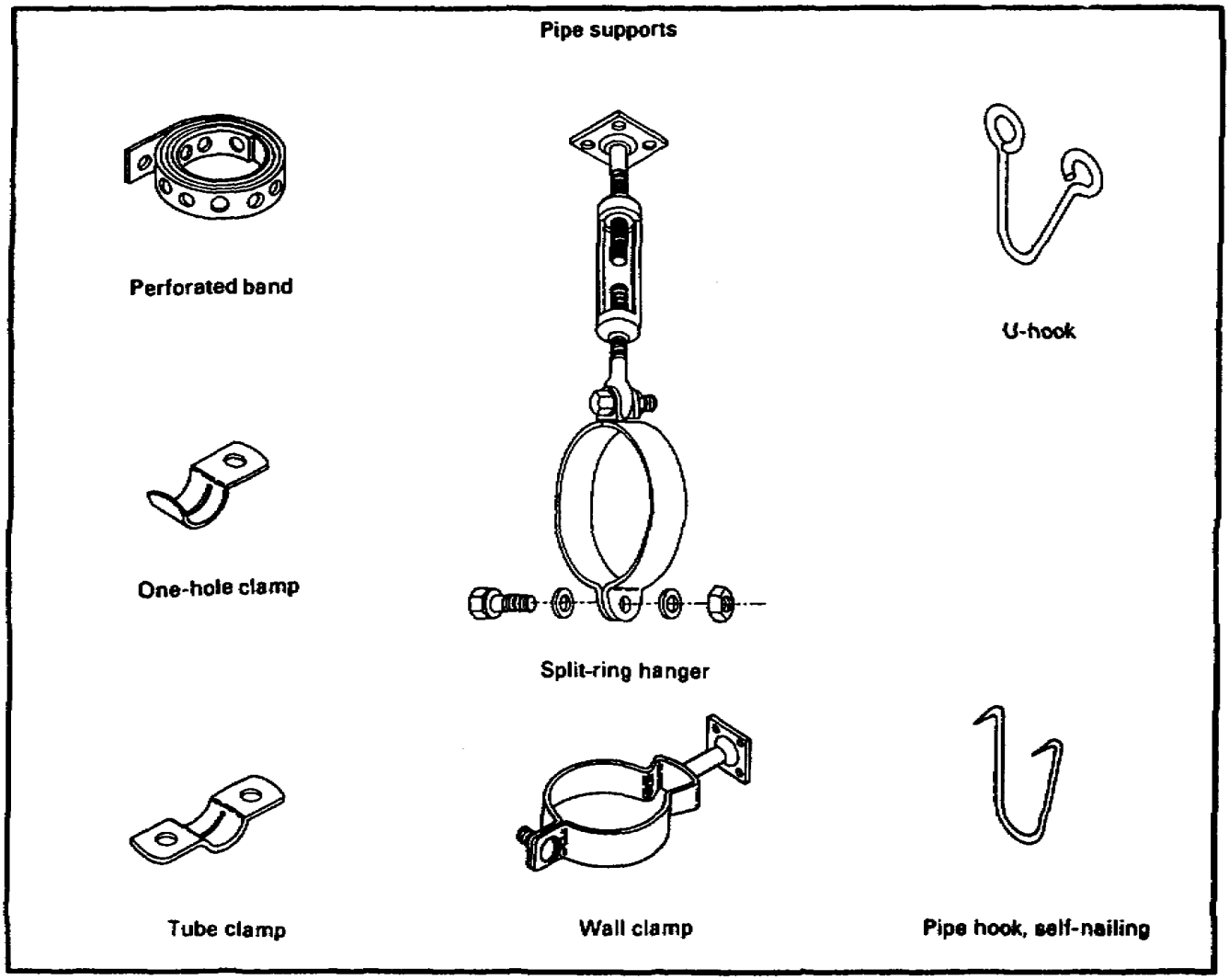

Lesson 2/Learning Event 4

Supporting Horizontal Water Piping. Use tube clamps, U-hooks or self-nailing hooks, perforated bands, and one-hole clamps to support a horizontal pipe run to a joist.

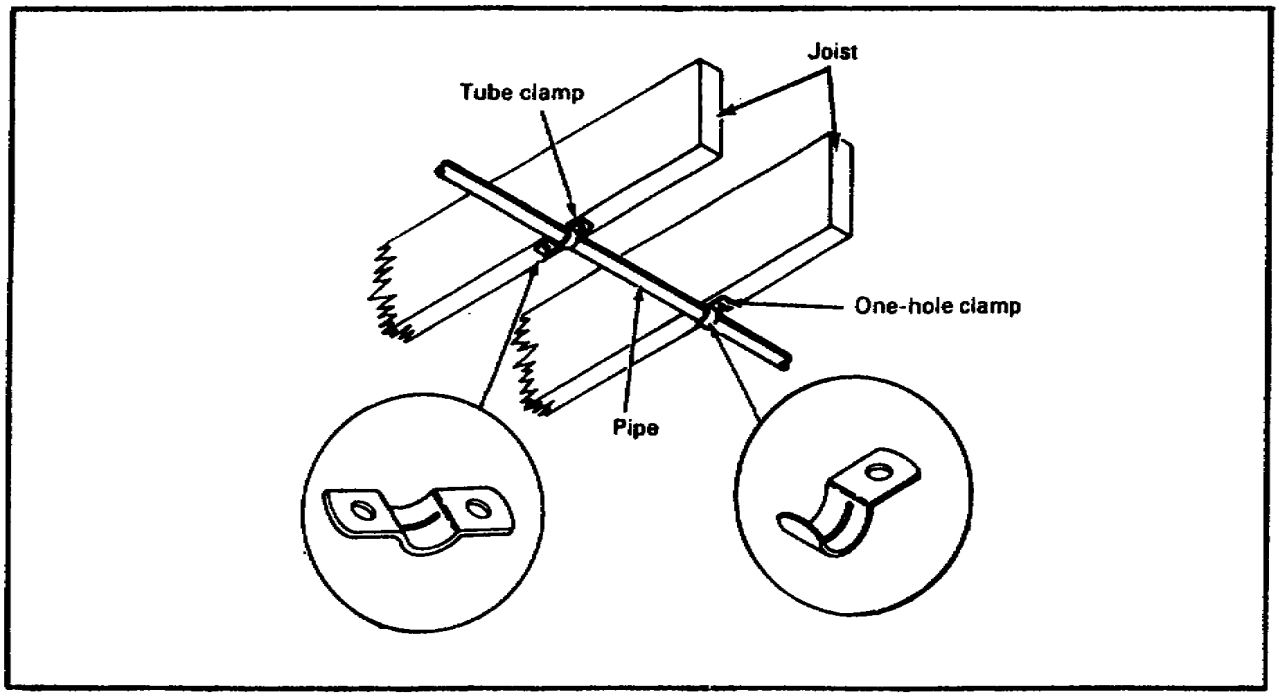

Supporting Vertical Water Piping. Use wood blockings to attach the pipe supports. The pipe supports which can be used to support a vertical water piping run are tube clamps, one-hole clamps, and perforated bands.

SELF-CHECK EXERCISE

Fill in the blank with your answer.

1. Horizontal and vertical _____ runs must be supported.

2. Match each pipe support with its name.
   A. Tube clamp
   B. Self-nailing pipe hook
   C. Wall clamp
   D. Perforated band
   E. One-hole clamp

Lesson 2/Learning Event 4

SELF-CHECK EXERCISE SOLUTIONS

Your answers should be-

1. Pipeline

2. D. Perforated band
   C. Wall clamp
   E. One-hole clamp
   A. Tube clamp
   B. Self-nailing pipe hook

If your responses are correct, GREAT. Continue on with the lesson. If not, go back and review the material.

Learning Event 5
TESTING SYSTEMS FOR LEAKS

Once the rough-in water pipeline system is completed, test the system for leaks. Locate and repair any leaks at once and retest the system.

Test a Rough-In System.

Plug and cap all openings.

Open the meter stop valve to allow the WATER PRESSURE to flow into the piping.

Check all fitting joints and pipes for leaks.

Resume Service. Loosen the cap and plugs one at a time to allow trapped air in the pipeline system to escape.

Lesson 2/Learning Event 5

SELF-CHECK EXERCISE

Fill in the blanks with your answers.

1. To test a rough-in water pipeline system, you must _____ and _____ all openings.

2. Open the meter stop valve for _____ to flow into the piping.

3. Loosen plugs and caps one at a time to allow _____ in the system to escape.

SELF-CHECK EXERCISE SOLUTION

Your answers should be-

1. Plug, cap

2. Water pressure

3. Trapped air

If your answers are correct, GREAT. Continue on with the lesson. If not, go back and review the material.

REVIEW EXERCISE

Check your understanding of lesson 2 by completing this review exercise. Try to complete all of the exercises without looking back at the lesson. When you are finished, turn to the solutions at the end of the lesson and check your answers. If you missed any questions, go back and restudy the place in the lesson where the information is given.

1. Where should you place the pipe joint compound to form a threaded galvanized steel pipe joint?

   A. Fitting threads
   B. Cut threads
   C. Pipe threads
   D. Pipe and fitting threads

2. Where should you apply the soldering flux to form a soldered joint for a rigid copper tubing?

   A. Outside of pipe and fitting end
   B. Outside of pipe end only
   C. Outside of pipe end and inside of fitting
   D. Inside of fitting only

3. Where does the soldering of a rigid copper tubing joint require the torch heat to be placed?

   A. Pipe
   B. Solder
   C. Flux
   D. Fitting

4. Where should you apply the solvent cement to form a solvent weld joint for a rigid plastic pipe?

   A. Inside of fitting only
   B. Outside of fitting and pipe
   C. Outside of pipe end only
   D. Outside of pipe end and inside of fitting

5. The water supply service water line to a building has three stops which are corporation, curb, and meter.

   A. True
   B. False

6. Refer to the illustration below. What are pipeline runs A, B, and C called?

   A.
   B.
   C.

7. Refer to the illustration below. What is the maximum notch depth cut in a 2- by 8-inch floor joist?

   A. 4 inches
   B. 3 inches
   C. 2 inches
   D. 1 inch

8. Refer to the illustration below. What is the maximum notch depth cut for a stud's measured distance?

   A. 1/8 of measured distance
   B. 1/4 of measured distance
   C. 1/3 of measured distance
   D. 1/2 of measured distance

9. All horizontal and vertical pipeline runs must be supported.

   A. True
   B. False

10. A rough-in pipeline water system in a building is tested for leaks before the floor and walls are installed.

    A. True
    B. False

Lesson 2/Review Exercise

REVIEW EXERCISE SOLUTIONS

1. C (page 40)
2. C (page 44)
3. D (page 44)
4. D (page 50)
5. A. True (page 34)
6. A. Cold water distribution pipeline
   B. Cold water branch pipeline
   C. Cold water riser line

(See page 54 for the answers to question 6.)

7. C (page 57)
8. D (page 58)
9. A. True (page 61)
10. A. True (page 65)

SUBCOURSE
EN5112

EDITION
A

WASTE SYSTEMS
(PLUMBING III)

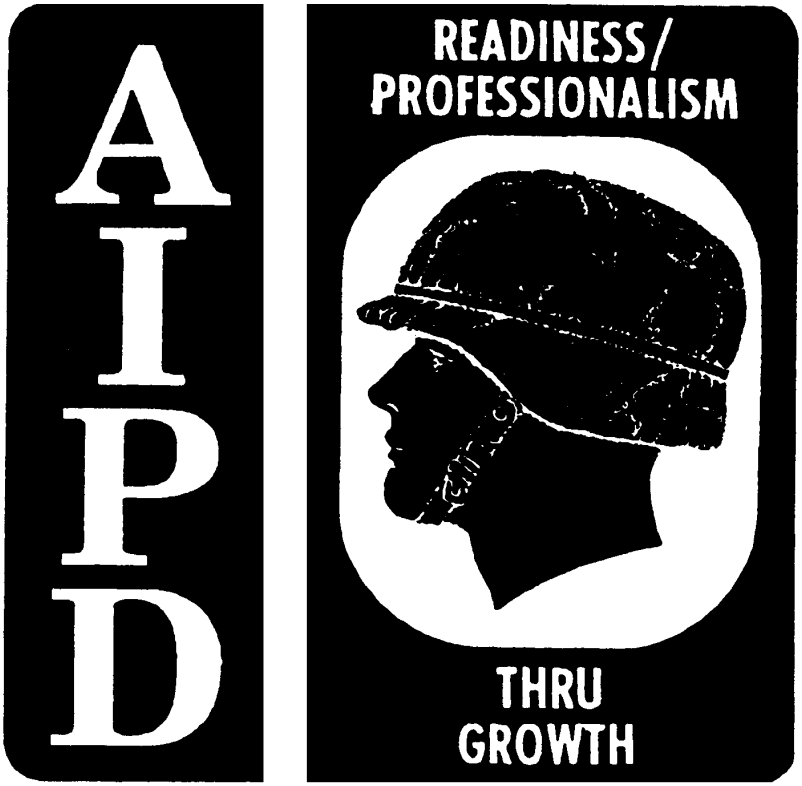

THE ARMY INSTITUTE FOR PROFESSIONAL DEVELOPMENT

ARMY CORRESPONDENCE COURSE PROGRAM

US ARMY PLUMBER
MOS 51K SKILL LEVELS 1 AND 2 COURSE

WASTE SYSTEMS
(PLUMBING III)

SUBCOURSE EN5112

US Army Engineer School
Fort Leonard Wood, Missouri

Eleven Credit Hours

GENERAL

The waste system subcourse, part of the Plumber MOS 51K Skill Levels 1 and 2 course, is designated to teach those tasks necessary to prepare, connect, and install pipes in a waste system. The subcourse is presented in two lessons, each corresponding to a terminal objective as indicated below.

Lesson 1: WASTE SYSTEMS AND MATERIALS

OBJECTIVE: Describe the procedures for preparing cast-iron pipe for installation.

TASK: 051-248-1003, Install cast-iron pipe.

CONDITIONS: Given subcourse booklet EN5112. You will work at your own pace and in your own selected environment with no supervision.

STANDARDS: Within approximately 3 hours, you should be able to study the lesson resources, answer the practice exercise questions, and select the correct response for each examination questions. You must respond correctly to 70 percent of the examination questions in order to receive credit for the subcourse.

Lesson 2: WASTE SYSTEM ROUGHING-IN

OBJECTIVE: Describe the procedures for installing cast-iron pipes for a rough-in waste system.

TASK: Task 051-248-1003, Install cast-iron pipe (connect and install pipe).

CONDITIONS: Given subcourse booklet EN5112. You will work at your own pace and in your own environment with no supervision.

STANDARDS: Within approximately 8 hours, you should be able to study the lesson resources, answer the practice exercise questions, and select the correct response for each examination question. You must respond correctly to 70 percent of the examination questions in order to receive credit for the subcourse.

TABLE OF CONTENTS

Section Page

TITLE PAGE i
TABLE OF CONTENTS iii
INTRODUCTION v
Lesson 1: WASTE SYSTEMS AND MATERIALS 1
- Learning Event 1: Classifying Types of Piping 3
- Learning Event 2: Measuring Pipes 9
- Learning Event 3: Preparing Piping Materials 20
- Learning Event 4: Identifying Fittings and Using Joint Connections for Rigid Plastic Pipe 31
- Learning Event 5: Identifying Fittings and Using Joint Connections for Galvanized Steel Pipe 35
- Learning Event 6: Identifying Fittings and Using Joint Connections for Rigid Copper Tubing 41
- Review Exercise 45
- Review Exercise Solutions 50

Lesson 2: WASTE SYSTEM ROUGHING-IN 51
- Learning Event 1: Installing Sewer Pipelines 53
- Learning Event 2: Installing Drain Lines and Stacks 57
- Learning Event 3: Venting the Waste System 65
- Learning Event 4: Installing Piping Material 75
- Learning Event 5: Supporting Pipeline Runs 85
- Learning Event 6: Testing the System for Leaks 89
- Review Exercise 93
- Review Exercise Solutions 96

INTRODUCTION

A plumber must know how to join and install different kinds of pipe to complete a waste system in a building. Made of different materials, these pipes must sometimes be cut and their ends prepared to take fittings. The pipe-to-pipe or pipe-to-fitting connections are made with lead, collars, threads, solvent cement, and solder, depending on the pipe material used. As the pipe system is installed, it must be supported with hangers and holders. Sometimes a plumber must cut into the building structure to install the waste and vent pipeline runs for lavatories, sinks, water closets, and urinals. Once the system of rough-in waste pipelines with venting is installed, it is tested for leaks.

Lesson 1
WASTE SYSTEMS AND MATERIALS

OBJECTIVE

At the end of this lesson, you will be able to describe the procedures for preparing cast-iron pipe for installation.

TASK

Task 051-248-1003, Install cast-iron pipe

CONDITIONS

You will have subcourse booklet EN5112. You will work at your own pace and in your own selected environment with no supervision.

STANDARDS

Within approximately 3 hours, you should be able to study the lesson resources, answer the practice exercise questions, and select the correct response for each examination question. You must respond correctly to 70 percent of the examination questions in order to receive credit for the subcourse.

REFERENCES

FM 5-51K1/2
TM 5-551K

Lesson 1
WASTE SYSTEMS AND MATERIALS

The waste system is that part of a piping system that carries liquid and semisolid waste to a point of disposal. The waste system includes venting for elimination of sewer gases. The various components in a waste system are illustrated below.

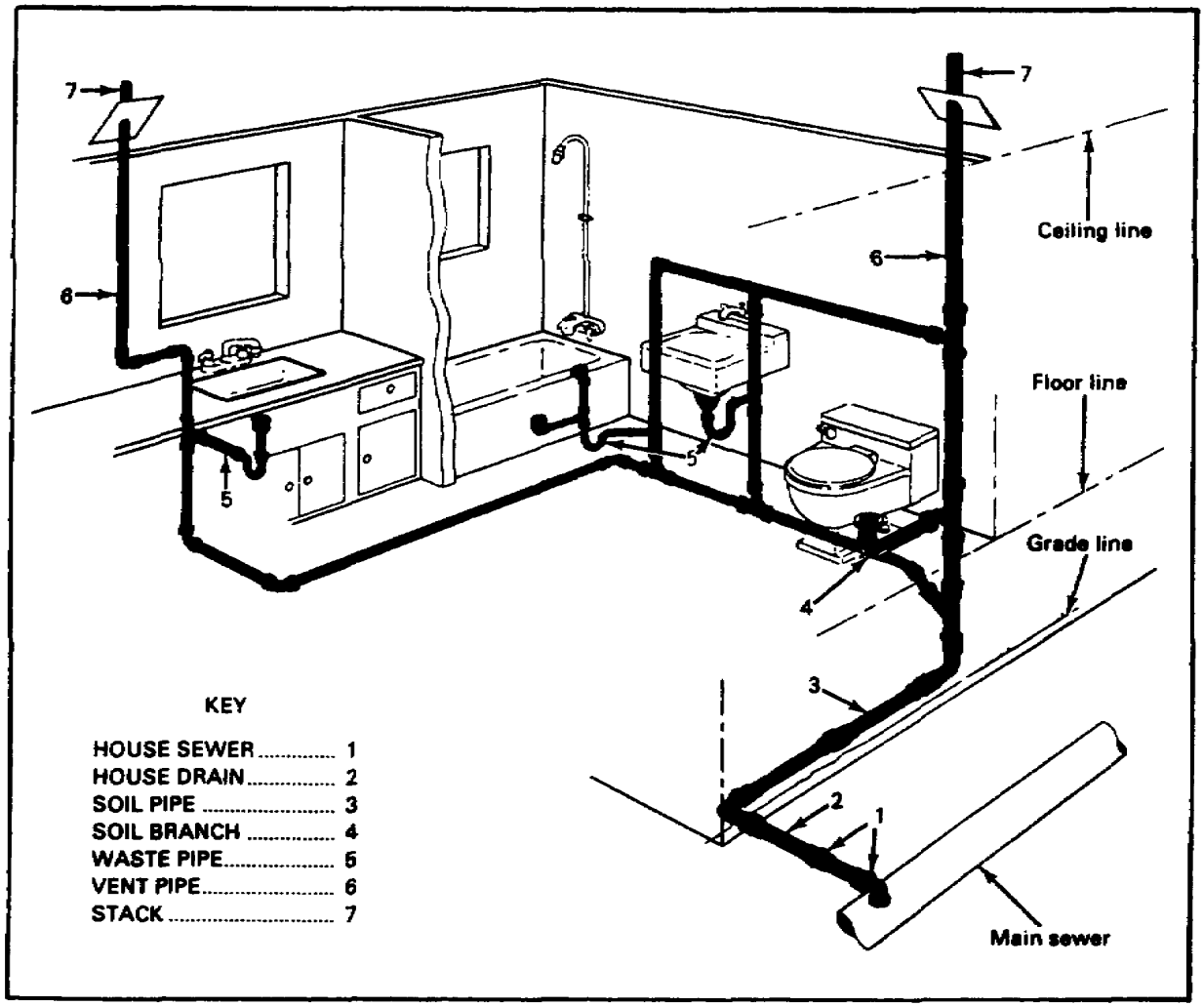

This lesson covers the classification of piping used in a waste system, the measurement of piping, and the preparation of piping material for installation. This lesson also covers the identification of fittings and the use of joint connections.

Learning Event 1:
CLASSIFYING TYPES OF PIPING

The types of piping that can be used in a waste system are cast-iron soil pipe, rigid plastic pipe (two kinds), galvanized steel pipe, and rigid copper tubing. The type of rigid copper tubing used in a waste system is called drain waste vent (DWV).

Cast-Iron Soil Pipe

Cast-iron soil pipe is used for waste lines and venting. It is cast in 5- and l0-foot lengths and in three different styles--single-hub, double-hub, and no-hub.

Single-hub pipe. This pipe has a hub on one end and a spigot on the other. The spigot of one section fits into the hub of the next. It is used for pipe-to-pipe and/or pipe-to-fitting connections.

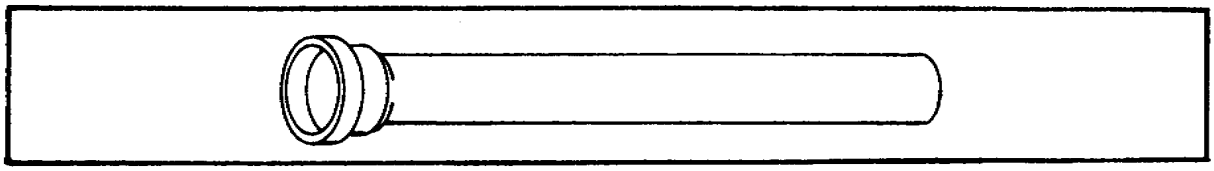

Double-hub pipe. This pipe has a hub on each end. It is cut and used when pieces of pipe shorter than 5 feet are needed. Waste is minimized because two usable lengths of pipe result. It is used for pipe-to-pipe or pipe-to-fitting connections.

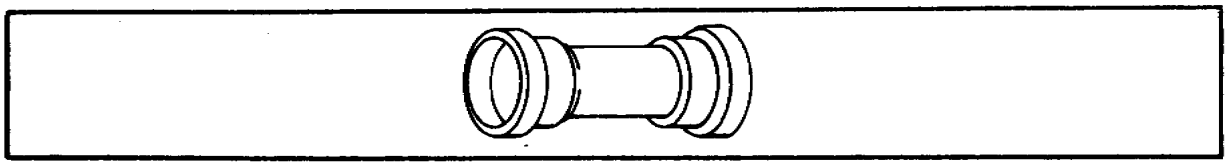

No-hub pipe. This pipe has plain ends. It is used for pipe-to-pipe and pipe-to-fitting connections. No-hub pipe enables a faster method of joining than the method used for pipes with hubs. These methods will be discussed in Learning Event 4.

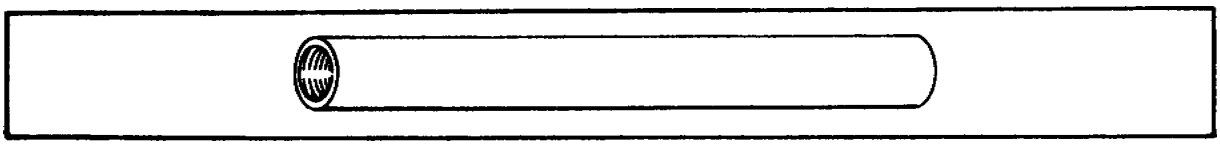

Rigid Plastic Pipe

Rigid plastic pipe can be used anywhere in the waste system. Plastic pipe is joined with solvent cement. There are two types-acrylonitrile-butadienestyrene (ABS) and polyvinyl chloride (PVC). ABS and PVC have the same uses. They both have a rigid, plastic appearance. PVC is white or sometimes pastel, and ABS is black or grey. Both come in 10-and 20-foot lengths.

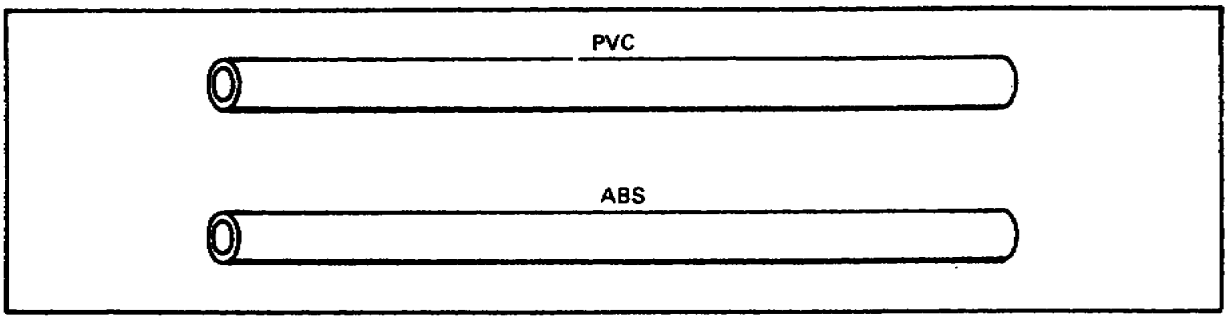

Galvanized Steel Pipe

Galvanized steel pipe is generally used in venting. It is the same kind used in a water system-made from mild carbon steel and galvanized to prevent rust. It is joined with a threaded joint in pipe-to-pipe or pipe-to-fitting connections. Galvanized steel should not be used underground. It comes in 21-foot lengths.

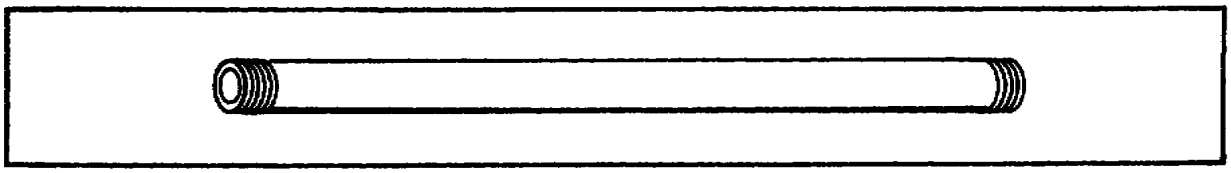

Rigid Copper Tubing (DWV)

Rigid copper tubing is marked with a yellow stripe in the DWV sizes, and it is expensive. Rigid copper tubing can be used anywhere in the waste system, but it is most often used for the drain waste vent. It is connected to fittings by a soldered joint. It comes in 10-and 20-foot lengths and can be assembled before making permanent connections.

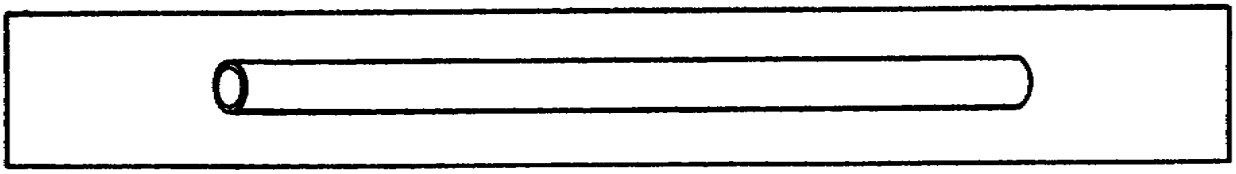

CAST-IRON SOIL PIPE

Advantages:

durable
strong
corrosion resistant
quiet
less expensive than copper

Disadvantages:

heavy
cumbersome to work with
difficult to join
difficult to repair
low in tensile strength

RIGID PLASTIC PIPE (ABS and PVC)

Advantages:

lightweight
easy to work with
easy to cut and join
easy to disassemble (for repairs)
corrosion-proof
a natural insulator
inexpensive
easy to install without special tools

Disadvantages:

low resistance to heat
internal pressure ratings lower than metal
imperfect seal in severely cold weather
hazardous vapors from cement used for joining
requirement for several closely spaced pipe hangers and supports
low crush resistance compared to metal
lack of acceptance by some local plumbing codes

GALVANIZED STEEL PIPE

Advantages:

inexpensive
strong, rugged
durable
able to withstand high water pressure well

Disadvantages:

time-consuming and difficult to install if not already threaded
not resistant to corrosion and scaling with certain types of water
not recommended for use underground
subject to buildups of corrosion that impede water flow
heavy

RIGID COPPER TUBING (DWV)

Advantages:

lightweight
easily joined
easily assembled before making permanent connections
durable

Disadvantages:

expensive
not resistant to corrosion from certain commerical wastes

Lesson 1
Learning Event 1
SELF-CHECK EXERCISE

1. Name the four types of piping used in a waste system.

   _____
   _____
   _____
   _____

2. Identify each type of cast-iron soil pipe.
   A._____
   B._____
   C._____

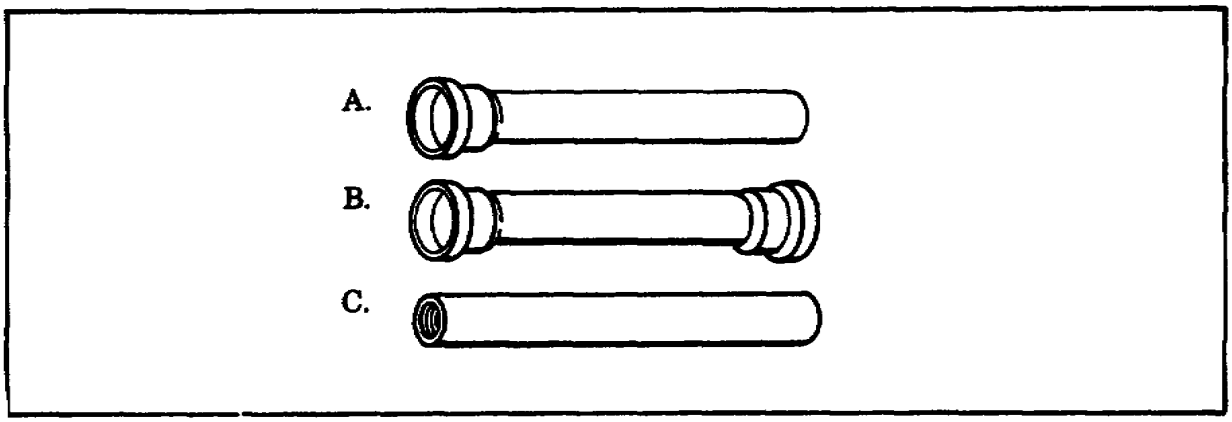

3. Which types of rigid plastic pipe are used in a waste system?
   A. ABS and CPVC
   B. PE and ABS
   C. PVC and PB
   D. ABS and PVC

Lesson 1/Learning Event 1

SELF-CHECK EXERCISE SOLUTIONS

1. *Cast-iron soil pipe*
   Rigid plastic pipe (ABS and PVC)
   Galvanized steel pipe
   Rigid copper tubing

Note. Order of listing s not important.

2. *A. Single-hub pipe*
   B. Double-hub pipe
   C. No-hub pipe
3. *D. ABS and PVC plastic pipe*

If your responses are the same, GREAT. Continue on with the lesson. If not, go back and review the material.

Learning Event 2:
MEASURING PIPES

The measurement for a length of pipe required for installation includes the amount of pipe engagement and the dimension of the fitting. This learning event describes engagement, fitting dimensions, and pipe length. The last section of this learning event explains how to use these three factors to determine the amount of pipe required for installation.

Engagement

Engagement for cast-iron soil pipe (single-hub). Different sizes of pipes require different amounts of engagement. A pipe engagement occurs when the spigot end of one pipe fits into the hub end of another pipe. A fitting engagement occurs when the end of a fitting fits into the hub end of a pipe. Always measure the distance inside the hub for a true pipe or fitting engagement.

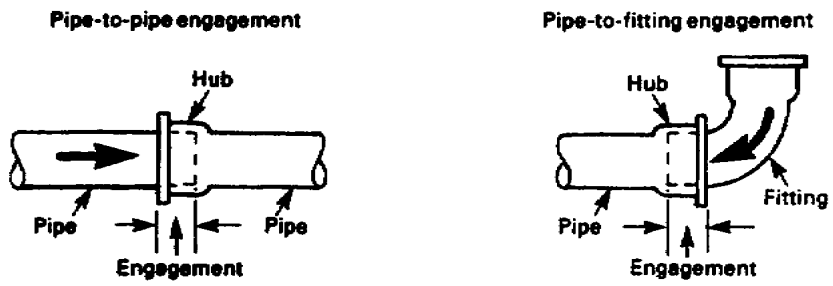

PIPE SIZE (IN INCHES)	APPROXIMATE ENGAGEMENT INTO HUB (IN INCHES)
2	2 1/2
3	2 3/4
4	3
5	3

Engagement for rigid plastic pipe (ABS and PVC). Different sizes of pipes require different amounts of engagement. Engagement occurs when the end of a pipe fits into the collar of a fitting. Always measure the distance inside the collar for a true fitting engagement.

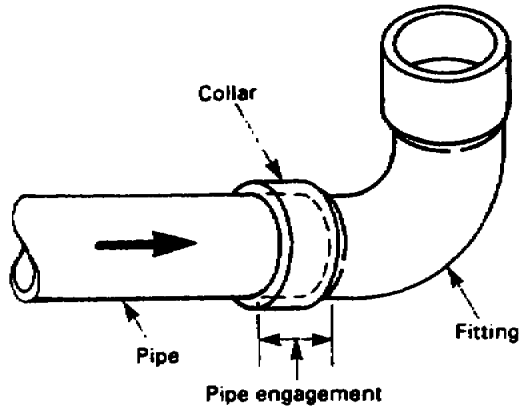

PIPE SIZE (IN INCHES)	APPROXIMATE ENGAGEMENT INTO FITTINGS (IN INCHES)
1 1/2	11/16
2	3/4
3	1 1/2
4	1 3/4

Engagement for galvanized steel pipe. Different sizes of pipe require different amounts of engagement. Engagement occurs when the threaded end of a pipe fits into the collar of a fitting. Always measure the distance inside the collar for a true fitting engagement.

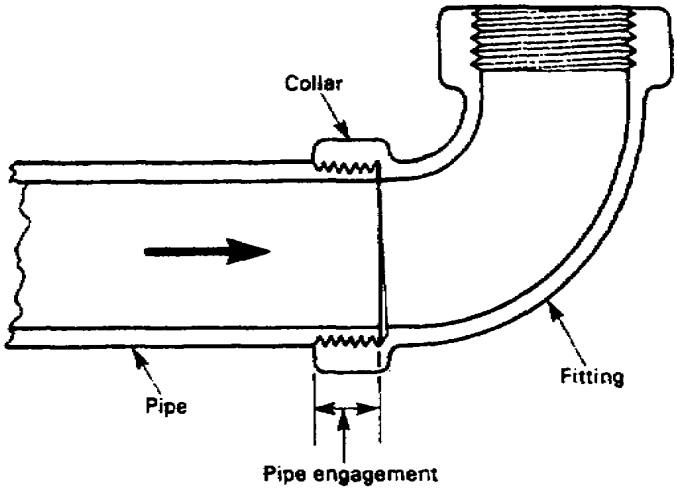

PIPE SIZE (IN INCHES)	APPROXIMATE ENGAGEMENT INTO FITTINGS (IN INCHES)
1 1/2	5/8
2	11/16
3	1
4	1 1/16

Engagement for rigid copper tubing (DWV). Different sizes of tubing require different amounts of engagement. Engagement occurs when the end of the tubing fits into the collar of a fitting. Always measure the distance inside the collar for a true fitting engagement.

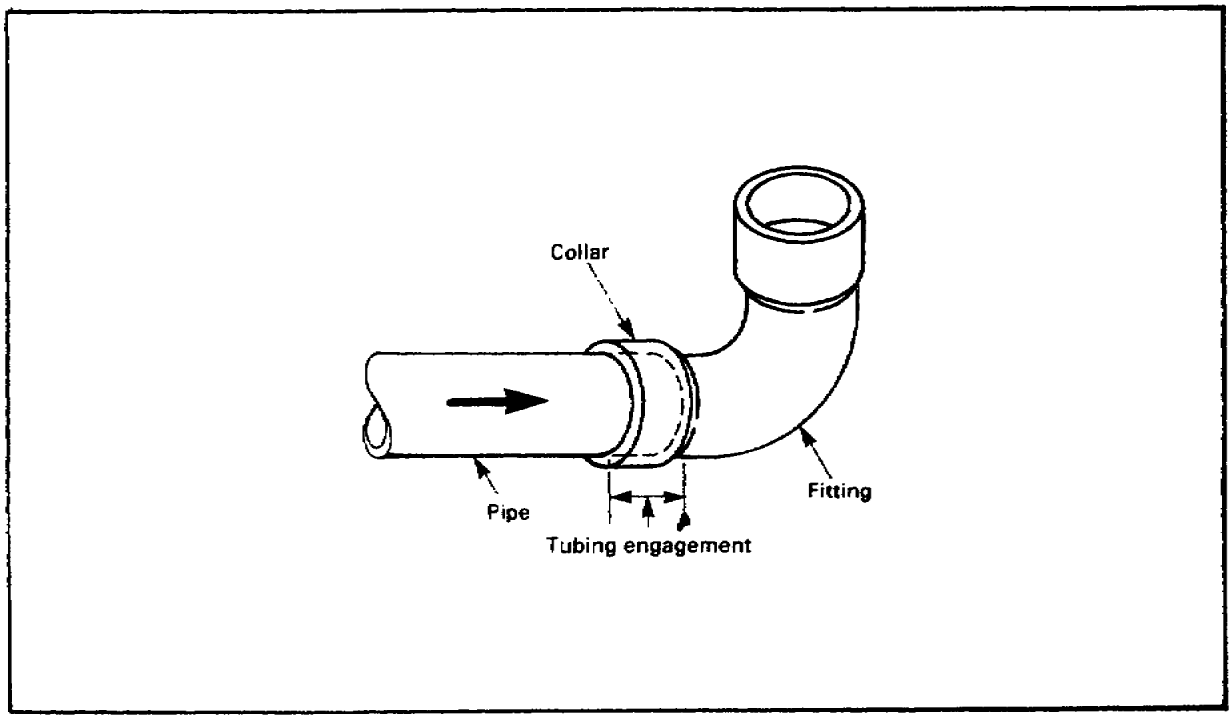

Fitting Dimension

The fitting dimension is also needed when determining the amount of pipe required for an installation. The fitting dimensions for all types of waste fittings are determined the same way. A fitting dimension is the distance from the center of the fitting to the end of the fitting.

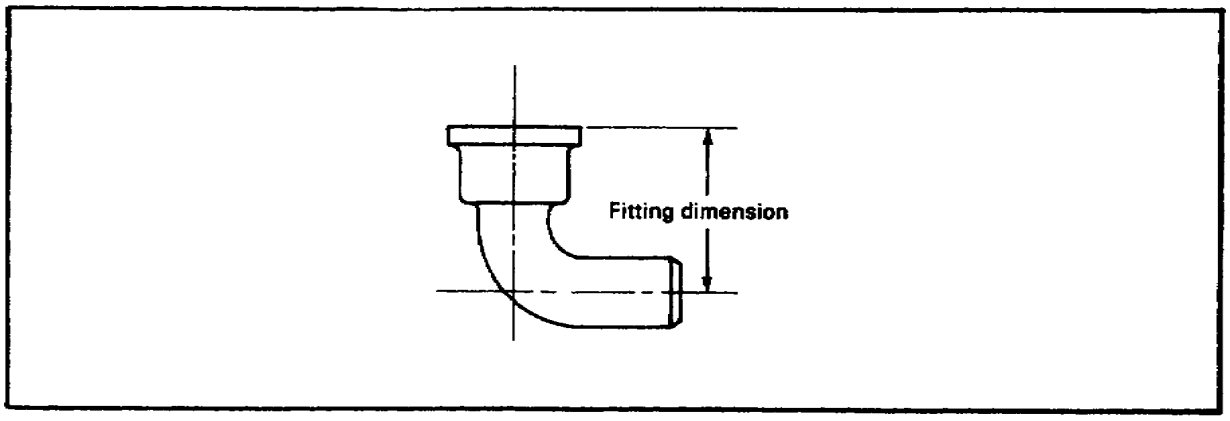

Measurement of Pipe Lengths

End-to-end measurement.

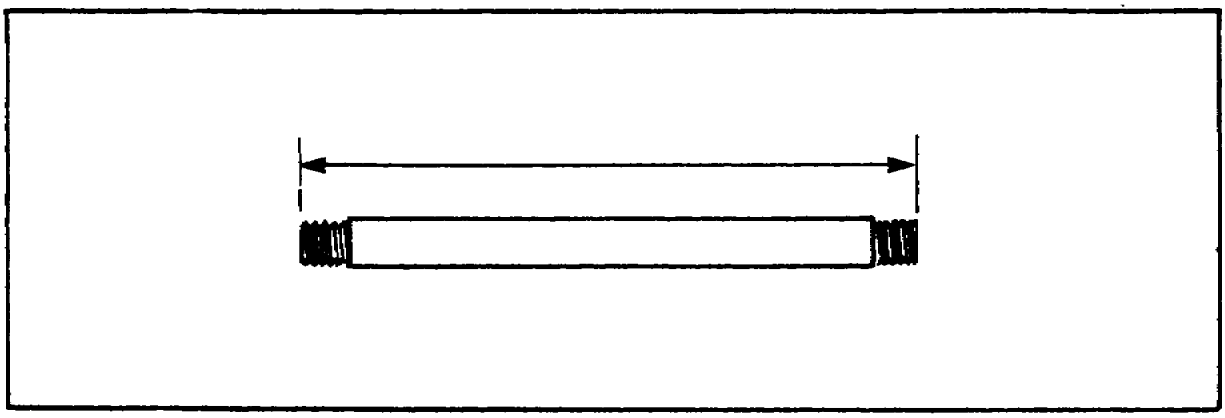

End-to-center measurement.

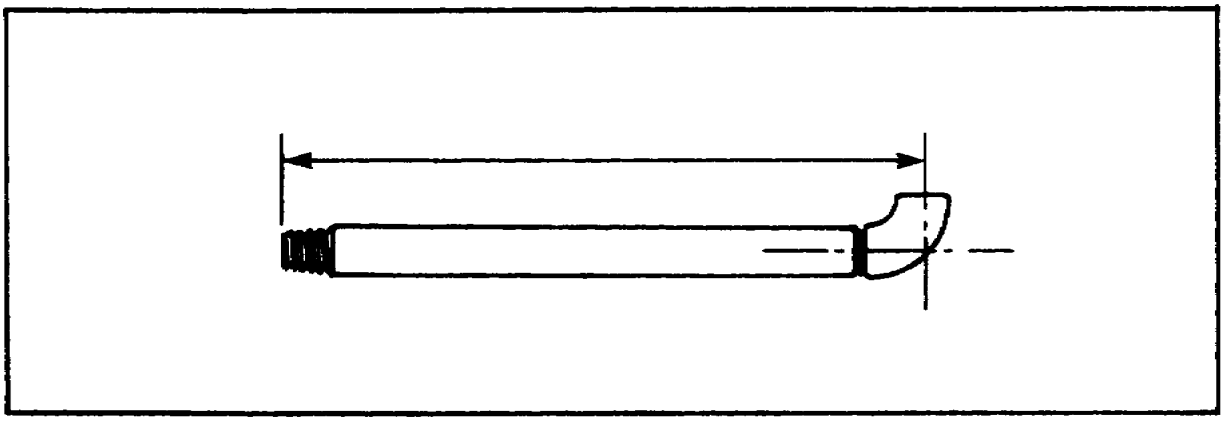

Center-to-center measurement.

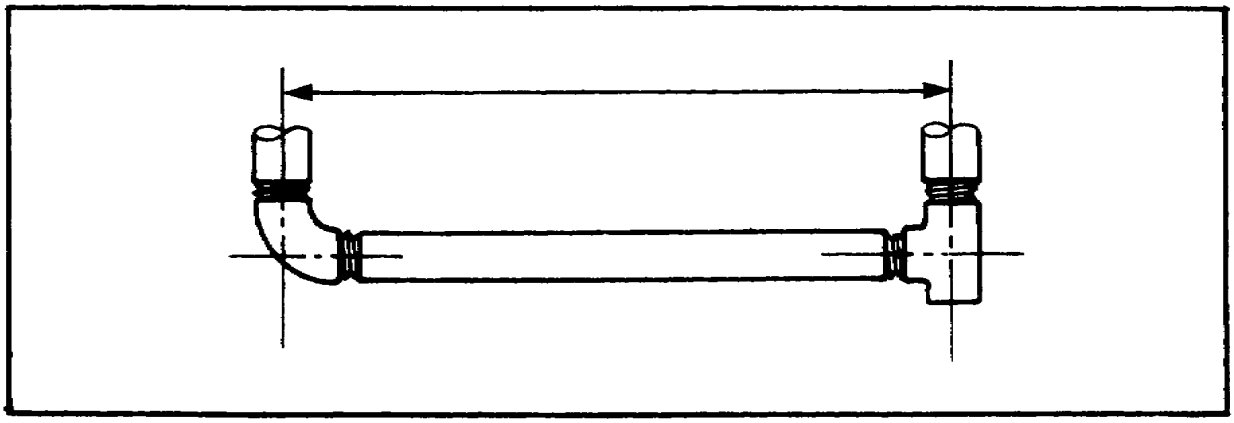

Determination of Amount of Pipe Required for Installation

Pipe-to-pipe. To figure the length of pipe required when using single-hub cast-iron pipe, use the following steps. The example given in italics is from the illustration below.

Measure the end-to-end distance from the place where the new pipe will be installed (*42 inches*).

Add the amount of engagement (*42 + 6 = 48*).

Take a double-hub pipe and cut off the one end. The remaining piece should equal the total (*48 inches*).

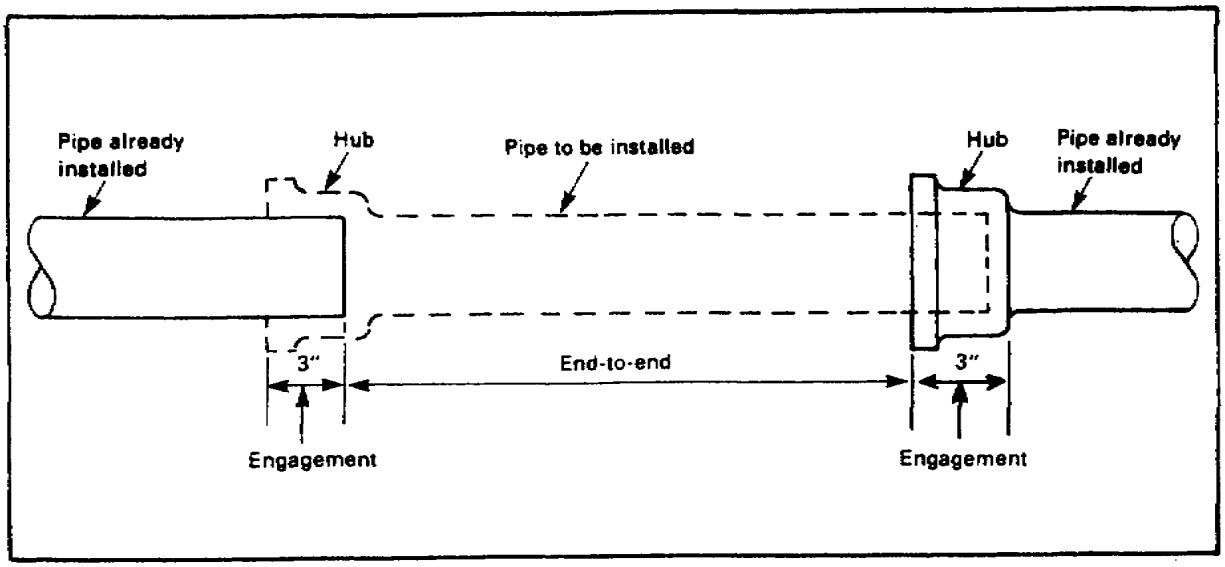

Example:

end-to-end	*42 inches*
engagement	*+ 6 inches*
length of pipe required	*= 48 inches*

Pipe-to-fitting. The method for figuring the length of pipe required for a pipe-to-fitting connection is the same for all types of piping. Use the following steps. The example given in italics is from the illustration below.

Measure the end-to-center distance from the place where the new pipe will be installed (*60 inches*).

Subtract the fitting dimension (*60 - 6 = 54*).

Add the amount of engagement (*54 + 2½ = 56½*).

Cut a pipe the length of the total (*56½ inches*).

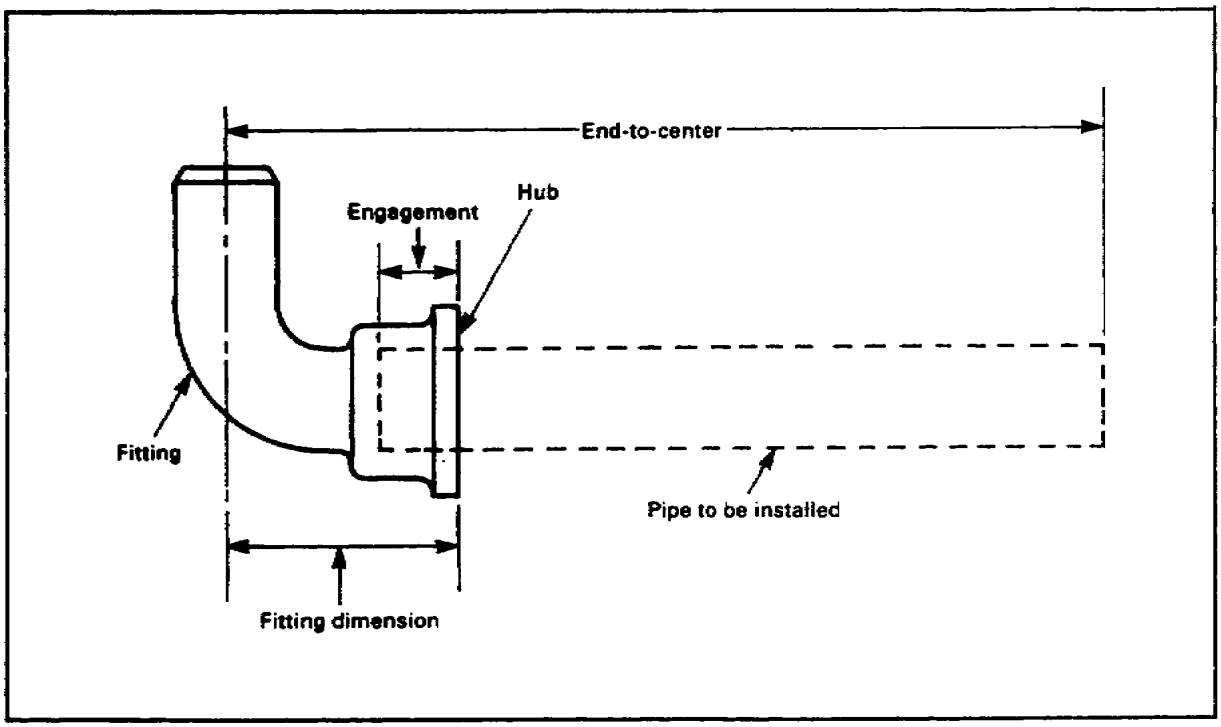

Example:

end-to-center	*60 inches*
fitting dimension	*- 6 inches*
engagement	*+ 2½ inches*
length of pipe required	*= 56½ inches*

Center-to-center. The method for figuring the length of pipe required for a connection between fittings is the same for all types of piping. Use the following steps. The example given in italics is from the illustration below.

Measure the center-to-center distance from the place where the new pipe will be installed (*66 inches*).

Subtract both fitting dimensions (*66- 5 - 5 = 56*).

Add the amount of engagement r both fittings (*56 + 2 + 2 = 60*).

Cut a pipe the length of the total (*60 inches*).

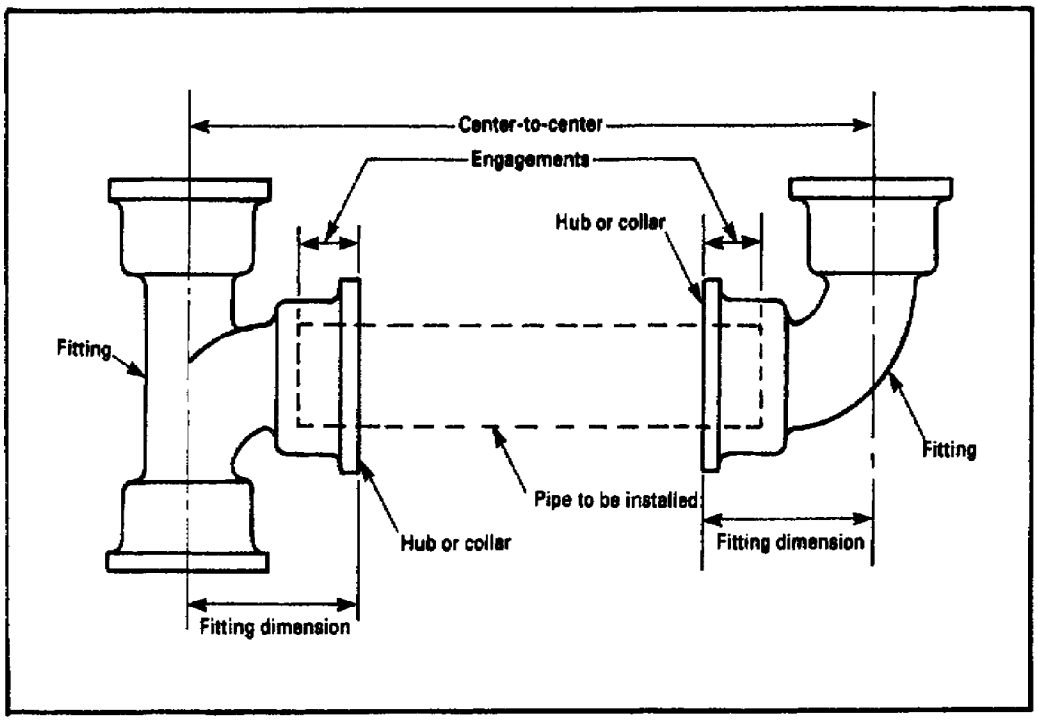

Example:

center-to-center	*66 inches*
both fitting dimensions	*- 10 inches*
engagement	*+ 4 inches*
length of pipe required	*= 60 inches*

Lesson 1
Learning Event 2
SELF-CHECK EXERCISE

1. To determine the amount of engagement into a fitting, where should you measure?
   A. Inside the hub or collar of a fitting
   B. End-to-end on a fitting
   C. From end-to-center of a fitting

2. From the illustration below, what is the fitting engagement, in inches, in the hub for 3-inch pipe?

   _____

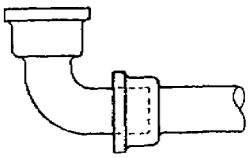

PIPE SIZE (IN INCHES)	APPROXIMATE ENGAGEMENT INTO HUB (IN INCHES)
2	2 1/2
3	2 3/4
4	3
5	3

3. Which fitting shows a correct fitting dimension? Circle one.
   A.
   B.
   C.
   D.

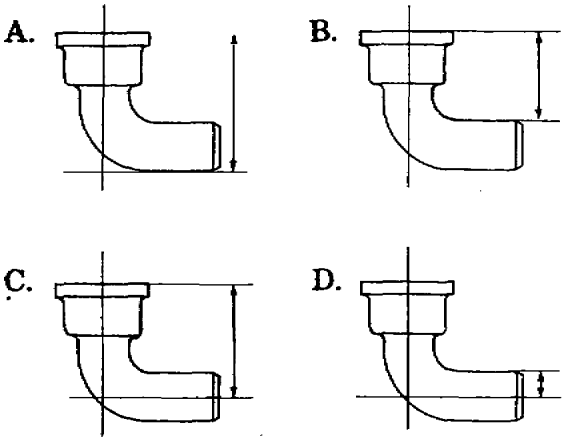

4. From the illustration below, what length of waste pipe, in inches, is required when you use an end-to-end measurement?

_____

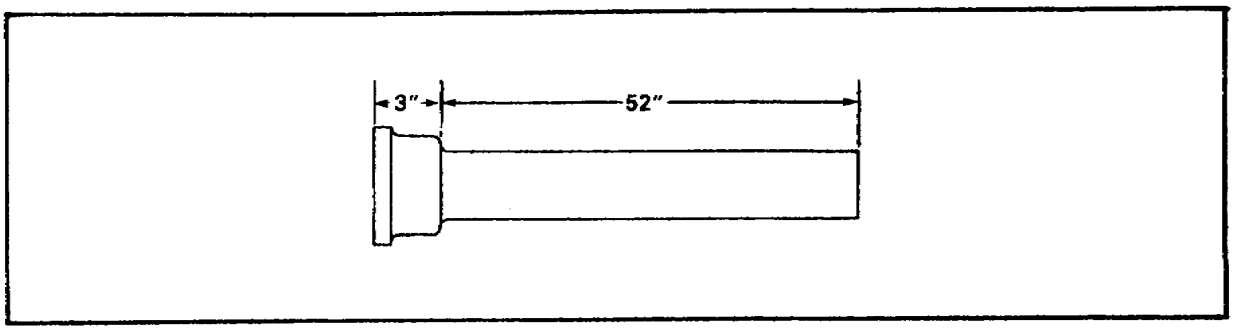

5. From the illustration below, what length of waste pipe, in inches, is required when you use an end-to-center measurement?

_____

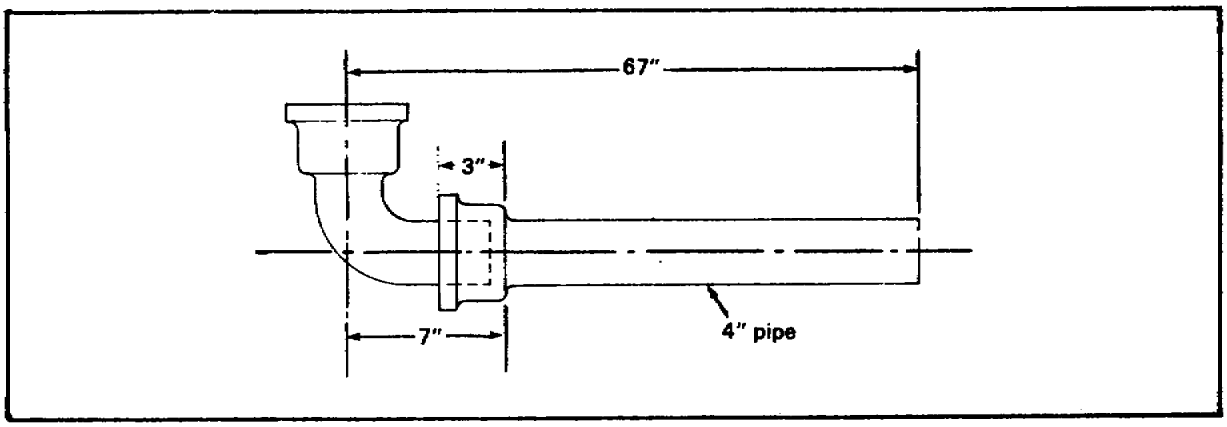

6. From the illustration below, what length of waste pipe, in inches, is required when you use a center-to-center measurement?

_____

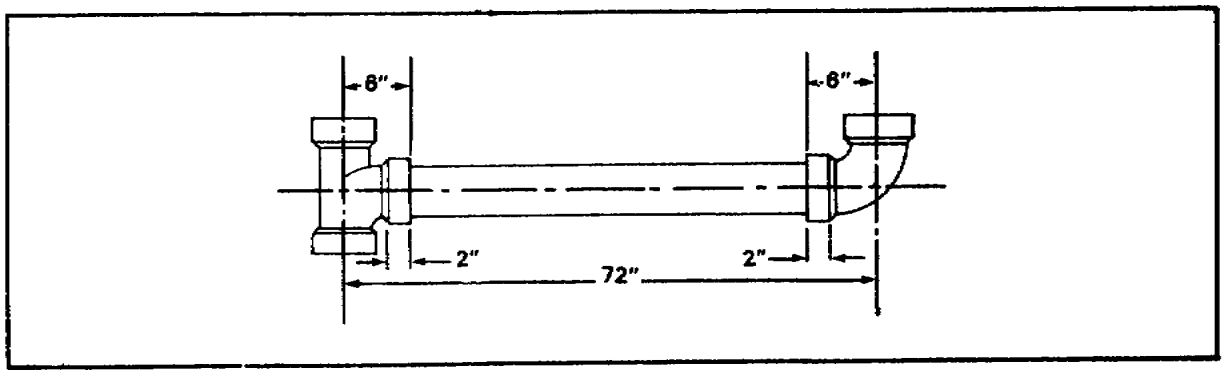

SELF-CHECK EXERCISE SOLUTIONS

1. *A. Inside the hub or collar of a fitting*
2. *2¾ inches*
3. *C*
4. *55 inches*

End-to-end measurement	*= 52 inches*
Engagement into hub	*= 3 inches*
Length	*= 52 + 3*
	= 55 inches

5. *63 inches*

End-to-center measurement	*= 67 inches*
Fitting dimension	*= 7 inches*
Fitting engagement	*= 3 inches*
Length	*= 67 - 7 + 3*
	= 60 + 3
	= 63 inches

6. *64 inches*

Center-to-center measurement	*= 72 inches*
Both fitting dimensions	*= 6 + 6 =12 inches*
Both pipe engagements	*= 2 + 2 = 4 inches*
Length	*= 72 -12 + 4*
	= 60 + 4
	= 64 inches

If your responses are the same, GREAT. Continue on with the lesson. If not, go back and review the material.

Learning Event 3:
PREPARING PIPING MATERIALS

Preparing piping material for installation requires that the pipe be measured, marked, cut, and cleaned. The last learning event described how to measure pipes used in a waste system. This learning event describes how to mark, cut, and clean piping material.

Preparing Cast-Iron Soil Pipe

Marking. When you cut with a hammer and chisel, mark completely around the pipe where it is to be cut. When you cut with a soil pipe cutter, one mark on the pipe is adequate. Use a crayon or chalk to mark piping material.

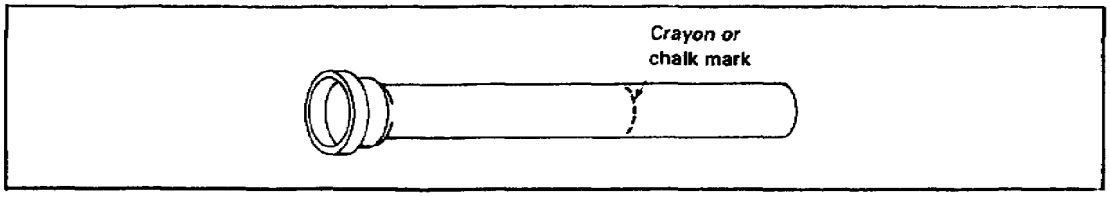

Cutting with a soil pipe cutter. This method can be used to cut uninstalled pipes. It can also be used to cut pipes that are already installed but need to be repaired. Use the following steps:

If the pipe is not installed, set it in a vise.

Place the cutting wheels of the cutter on the measured mark. Tighten the adjusting knob.

Rotate the cutter back and forth around the pipe.

Continue tightening the adjusting knob and rotating the cutter until the pipe is cut.

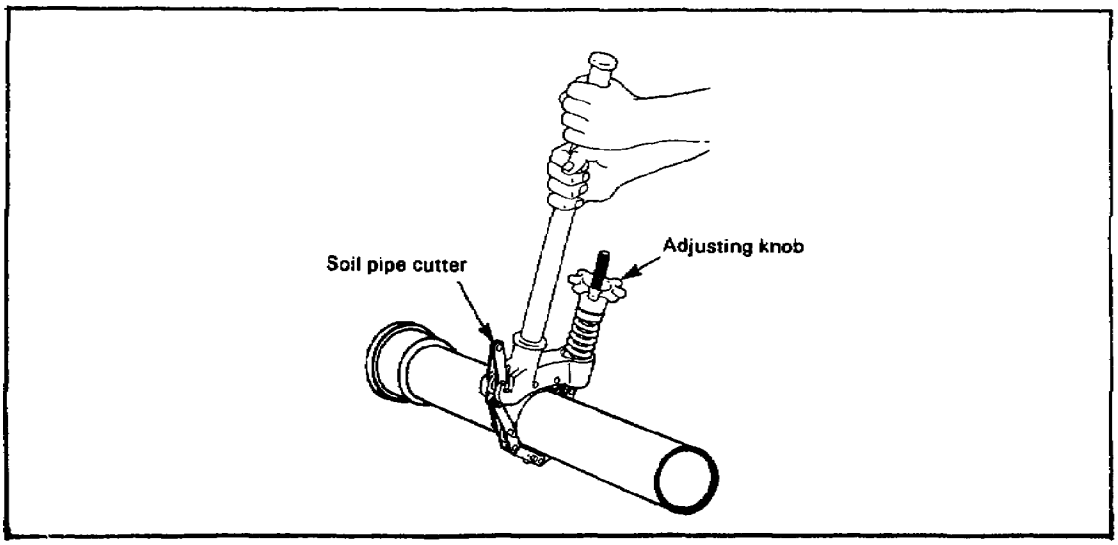

Cutting with a hammer and cold chisel. This method can be used to cut cast-iron soil pipe when a cutter is unavailable. Use the following steps:

Lay the pipe on a wooden board or a mound of dirt.

Place the chisel on the measured mark. Tap it lightly with the hammer, scoring completely around the pipe.

Using firmer blows, score around the pipe again.

Continue scoring until the pipe breaks off.

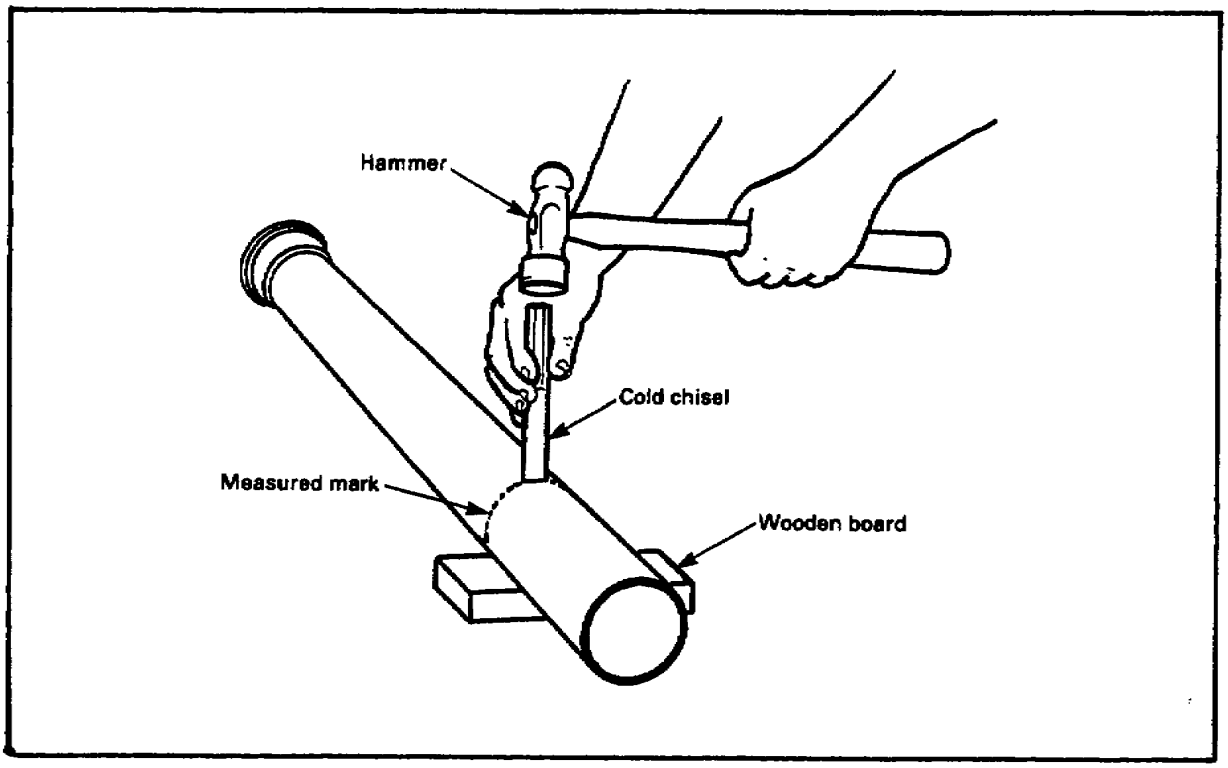

Cleaning. Remove foreign matter or moisture on the pipe ends with a rag.

Preparing Rigid Plastic Pipe (ABS and PVC)

Marking. Mark the pipe with a crayon or chalk at the required length.

Cutting with a hacksaw. Use the following steps:

Place uninstalled marked pipe in a miter box or a vise. If a vise is used, cover the jaws with a rag to prevent damage to the pipe.

Make the cut on the measured mark with a fine-tooth hacksaw. Be certain that the pipe is cut squarely, or it will not join properly.

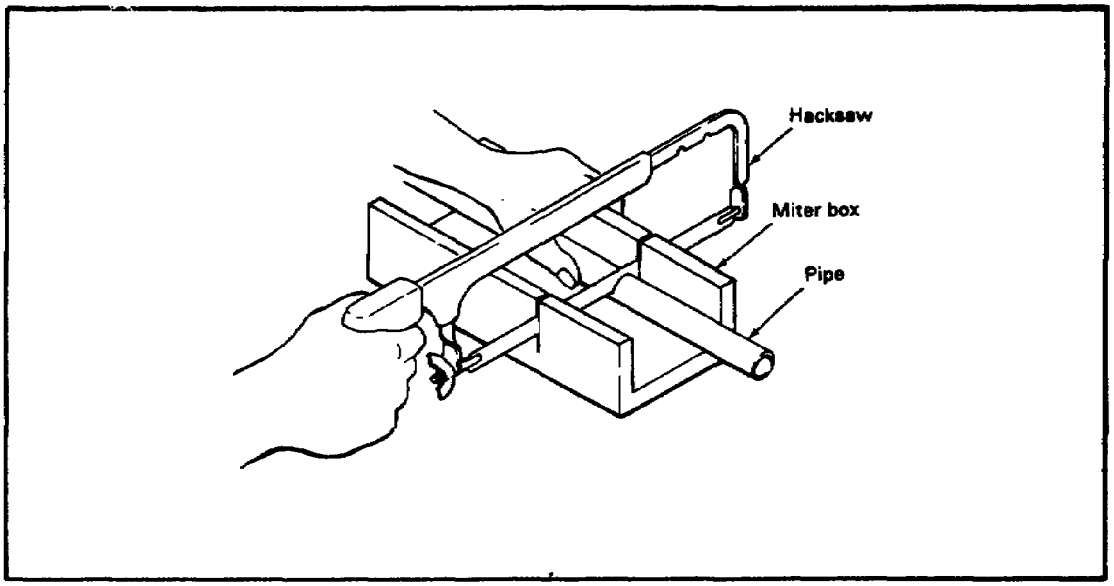

Removing burrs. Remove the burrs on the pipe's cut end with a pocket knife or sandpaper. When removing the burrs, be careful not to damage the pipe ends.

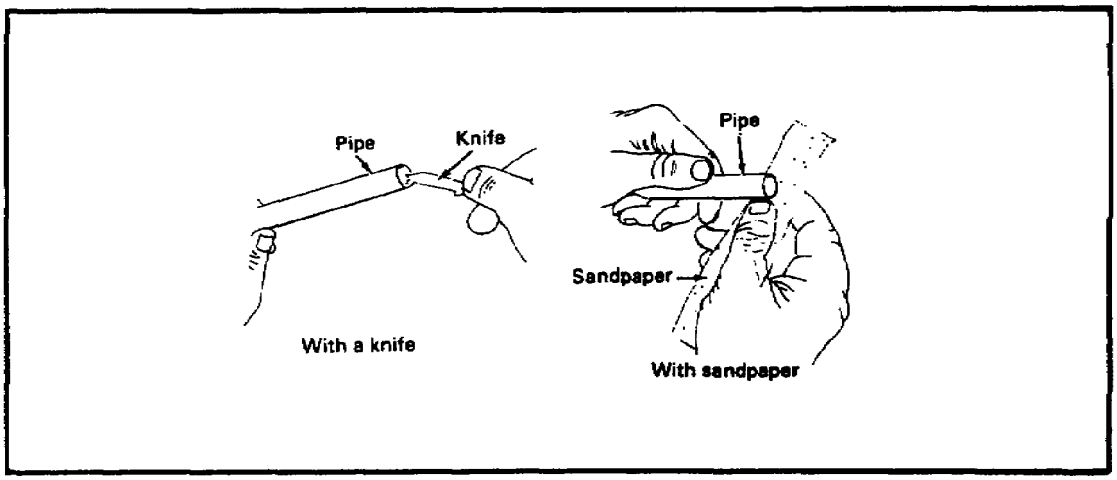

Removing gloss and cleaning. For a good joint connection, use sandpaper to remove the gloss from the outside ends of the pipe. Then clean the pipe with an authorized solvent cleaner.

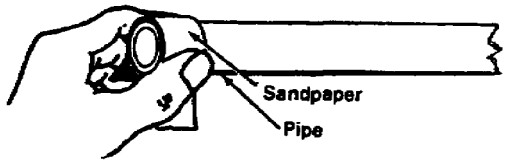

Preparing Galvanized Steel Pipe

Marking. Mark the pipe with a crayon or chalk at the required length.

Cutting with a pipe cutter. Use the following steps:

Place the pipe in a vise with the measured mark about 8 inches from the vise.

Set the cutting wheel on the mark and turn the cutter handle clockwise to get a bite on the pipe.

Turn the whole cutter clockwise, applying cutting oil to the cutting wheel.

After each complete turn of the cutter, give the handle a quarter turn until the pipe is cut.

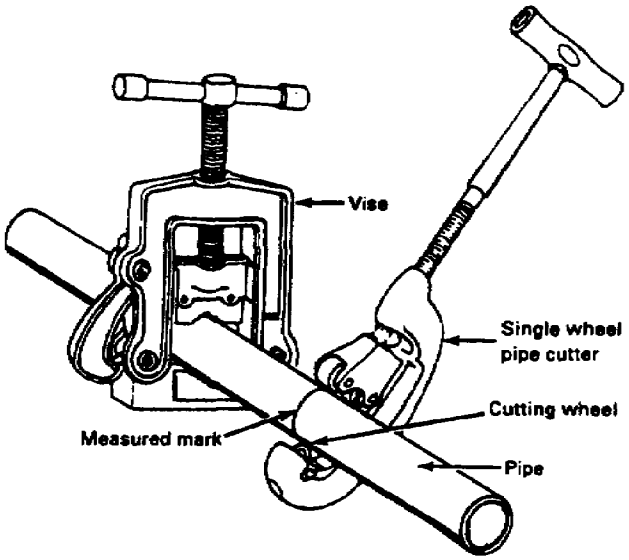

Lesson 1/Learning Event 3

Cutting with a hacksaw. Use the following steps:

Place the pipe in a vise.

With a fine-tooth hacksaw, cut the pipe on the measured mark.

Make the cut as squarely as possible to simplify threading the pipe when joining.

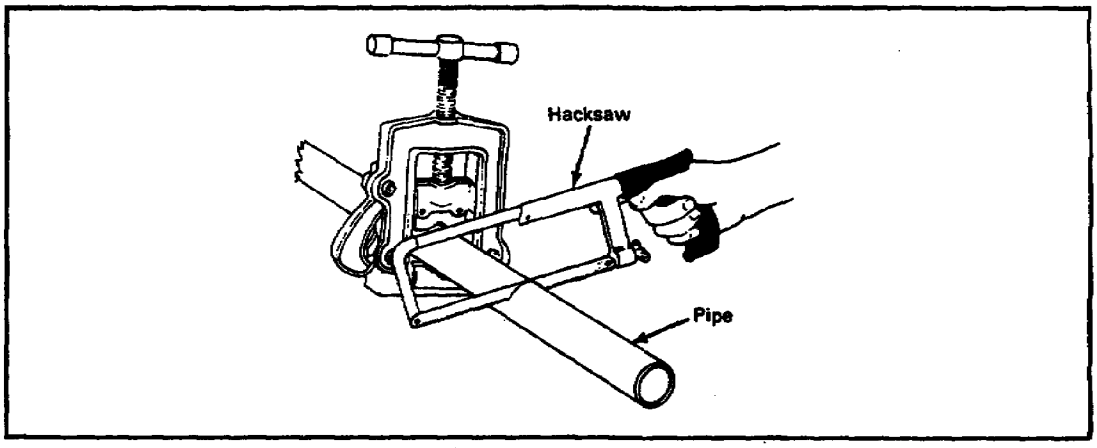

Removing burrs. Remove burrs on the outside of the pipe's cut end with a fine metal file. Remove burrs on the inside with a pipe reamer. With the pipe reamer use the following steps:

Push the reamer into the pipe, applying pressure with one hand.

With the other hand, turn the reamer clockwise using short, even strokes until all burrs are removed.

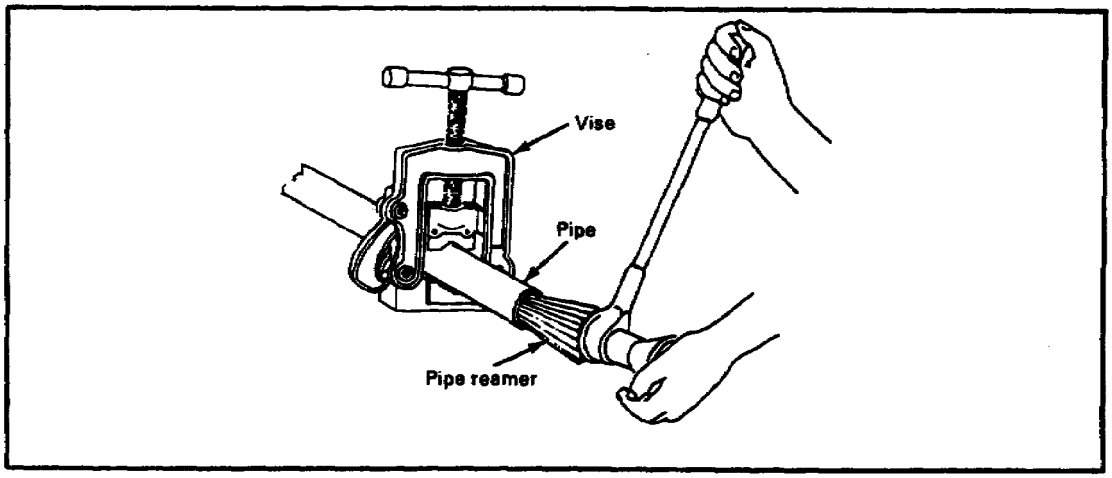

Threading. Use a die and die stock to thread the ends of the pipe. Use the following steps:

Insert the correct size die in the die stock.

Slide the die stock over the pipe end and apply pressure to the stock with one hand.

With the other hand, turn the stock handle clockwise slowly until the die has taken a bite on the pipe.

Give the stock handle one complete clockwise turn and then back off a quarter turn, applying cutting oil as needed.

Repeat this action until ¼ inch of the pipe is beyond the die stock.

Remove the die stock by turning the handle in a counterclockwise direction.

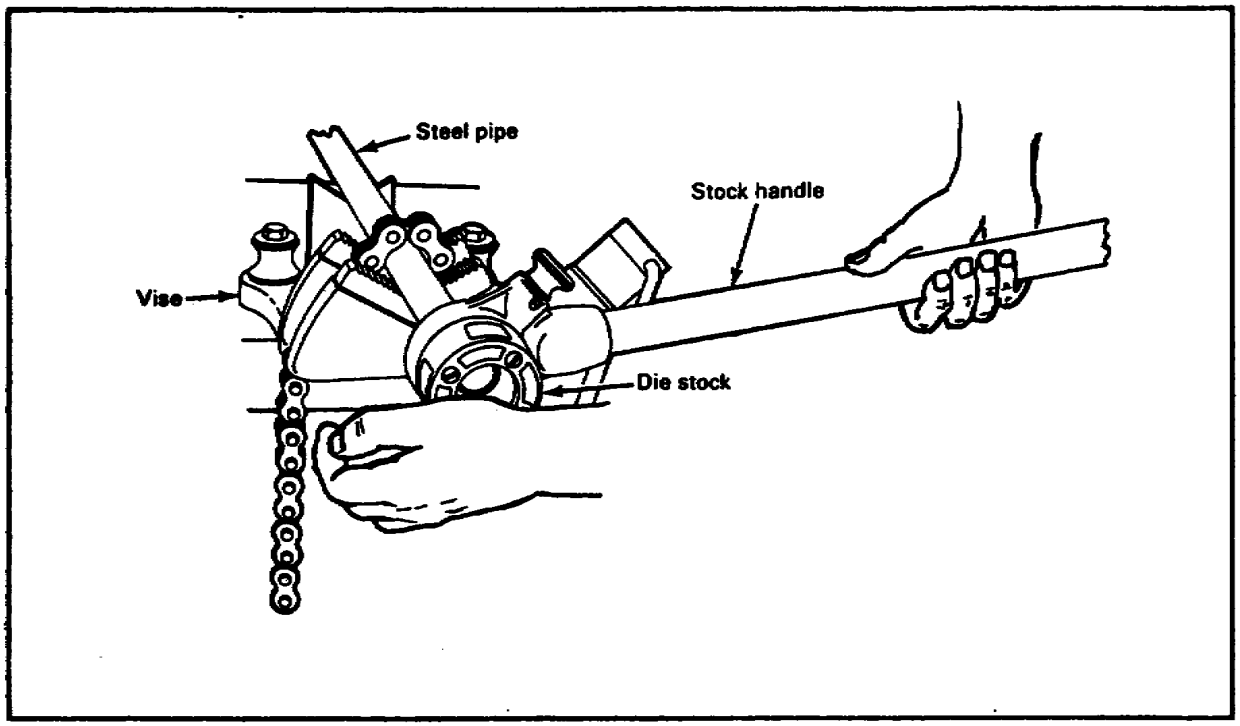

Cleaning. Prepare the threaded end for a joint connection by removing excess oil with a heavy rag and any chips with a wire brush.

Lesson 1/Learning Event 3

Preparing Rigid Copper Tubing (DWV)

Marking. Mark the pipe with a crayon or chalk at the required length.

Cutting with a tube cuter. Use the following steps:

Hold the tubing with one hand, and set the cutting wheel on the measured mark with the other hand.

Turn the knob on the cutter until the wheel takes a bite on the tubing.

Turn the cutter in a clockwise direction, and, at the same time, turn the knob.

Continue this action until the tubing is cut.

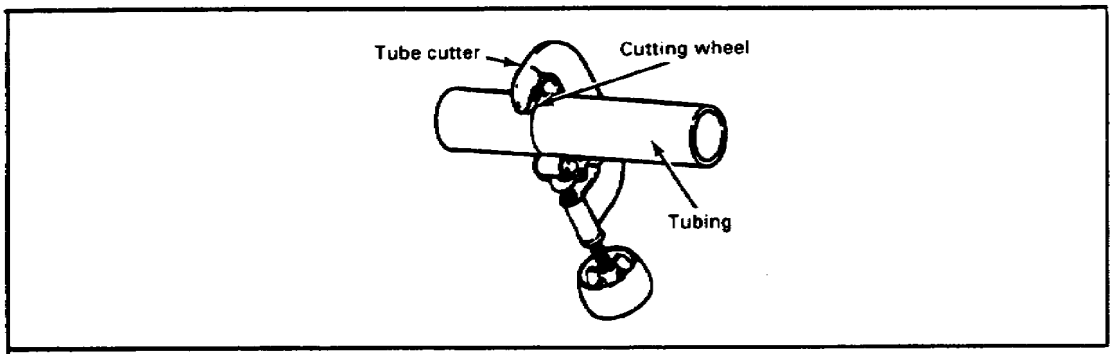

Cutting with a hacksaw. Use the following steps:

Place the tubing in a miter box or vise.

Using a fine-tooth hacksaw, cut the tubing.

Make the cut as squarely as possible for a good joint connection.

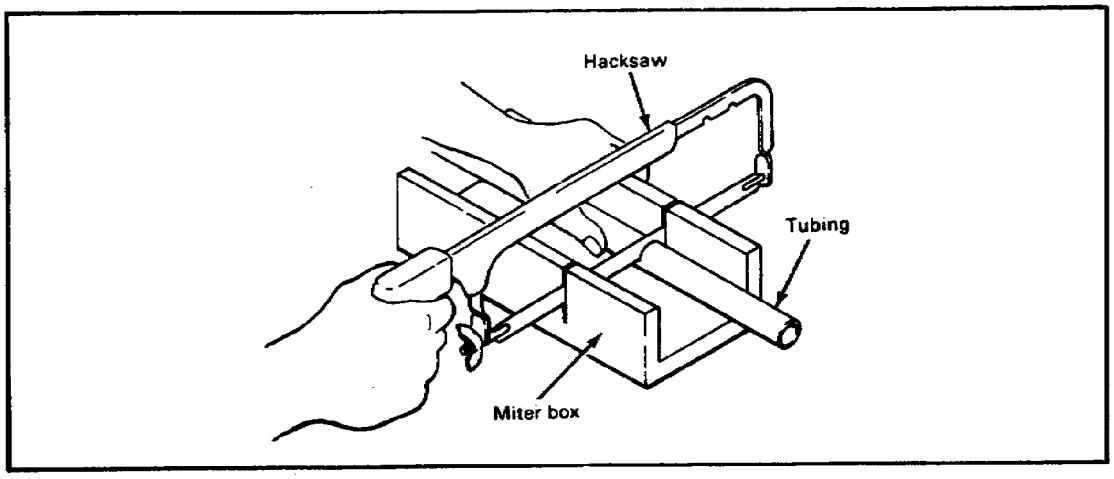

Removing burrs. You can move burrs from inside the tubing by going around the cut end lightly with a fine-metal file. You can also remove burr with a tube cutter reamer blade. Use the following steps:

Place the reamer blade into the tubing end.

Turn the handle clockwise until all the burrs are removed.

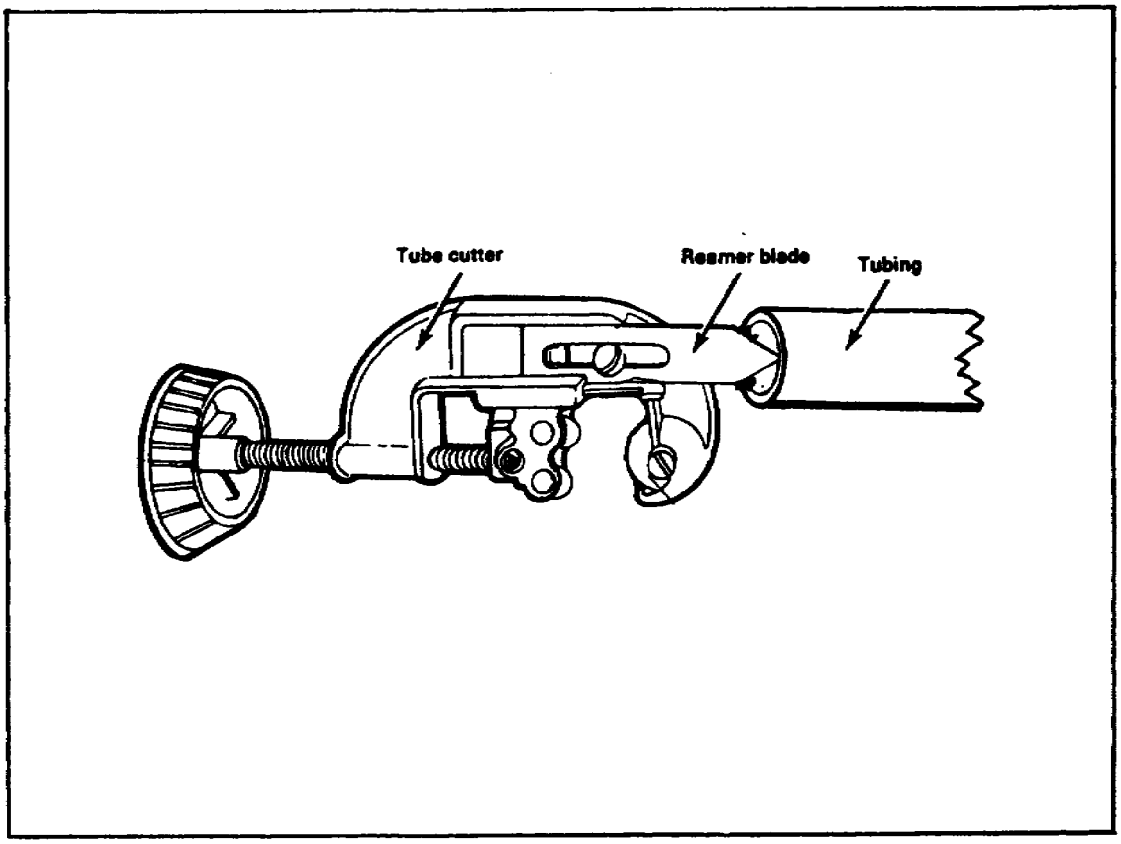

Lesson 1/Learning Event 3

Cleaning. For a good joint connection, use emery cloth to clean the outside end of the tubing and the inside of the fitting. Clean to a bright shine.

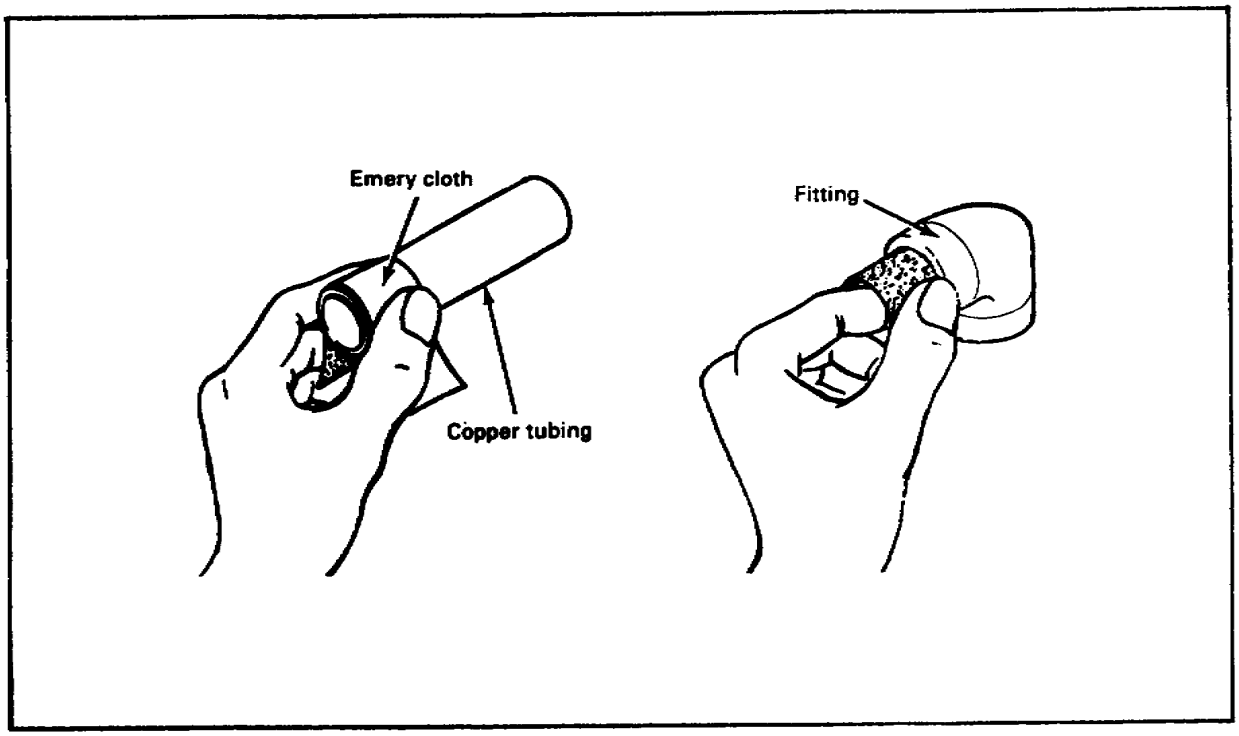

Lesson 1
Learning Event 3
SELF-CHECK EXERCISE

Fill in the blanks.
Cast-iron soil pipe:

1. You are to cut a cast-iron so pipe with a hammer and chisel. Once you have measured the pipe length required, the length is marked _____with crayon or chalk.

2. When you are scoring cast-iron pipe by tapping a cold chisel with a hammer, the score is made completely _____the pipe.

3. When you are cutting cast-iron pipe with a soil pipe cutter, the cutter is rotated _____and _____around the pipe until it is cut.

4. As you rotate the cutter, tighten the _____until the pipe is cut. Rigid plastic pipe (ABS and PVC):

5. Rigid plastic pipe (ABS and PVC) is cut with a _____.

6. The burrs from the cut end of plastic pipe can be removed with a _____or _____.

7. The _____from an outside end of plastic pipe is removed with _____.
Galvanized steel pipe:

8. To cut galvanized steel pipe with a single-wheel pipe cutter, the cutting wheel is placed on the _____.

9. For every one complete turn around the pipe with the pipe cutter, the cutter's handle is given an additional _____.

10. Galvanized steel pipe can also be cut with a _____.

11. The burrs from the inside of the cut end of the pipe are removed with a _____.

12. A completely threaded steel pipe should extend _____inch(es) beyond the die stock.
Rigid copper tubing (DWV):

13. Rigid copper tubing (DWV) can be cut with a _____or a _____.

14. The buns from the cut end can be removed with a _____or a _____.

15. The outside cut end of rigid copper tubing (DWV) is cleaned to a bright shine with _____.

Lesson 1/Learning Event 3

SELF-CHECK EXERCISE SOLUTIONS

1. *Around the pipe*
2. *Around*
3. *Back and forth*
4. *Adjusting knob*
5. *Hacksaw with fine-tooth blade*
6. *Knife, sandpaper*
7. *Gloss, sandpaper*
8. *Measured mark*
9. *Quarter turn*
10. *Hacksaw*
11. *Pipe reamer*
12. *¼ inch*
13. *Tube cutter, hacksaw*
14. *Reamer blade, metal file*
15. *Emery cloth*

If your responses are the same, GREAT. Continue on with the lesson. If not, go back and review the material.

Learning Event 4:
IDENTIFYING FITTINGS AND USING
JOINT CONNECTIONS FOR RIGID PLASTIC PIPE

This learning event illustrates rigid plastic pipe fittings (ABS and PVC). This learning event also explains how to make a joint connection on rigid plastic pipe.

Fittings

The illustration below shows fittings for ABS plastic pipe. Fittings for PVC plastic pipe are the same except that the color is white or pastel.

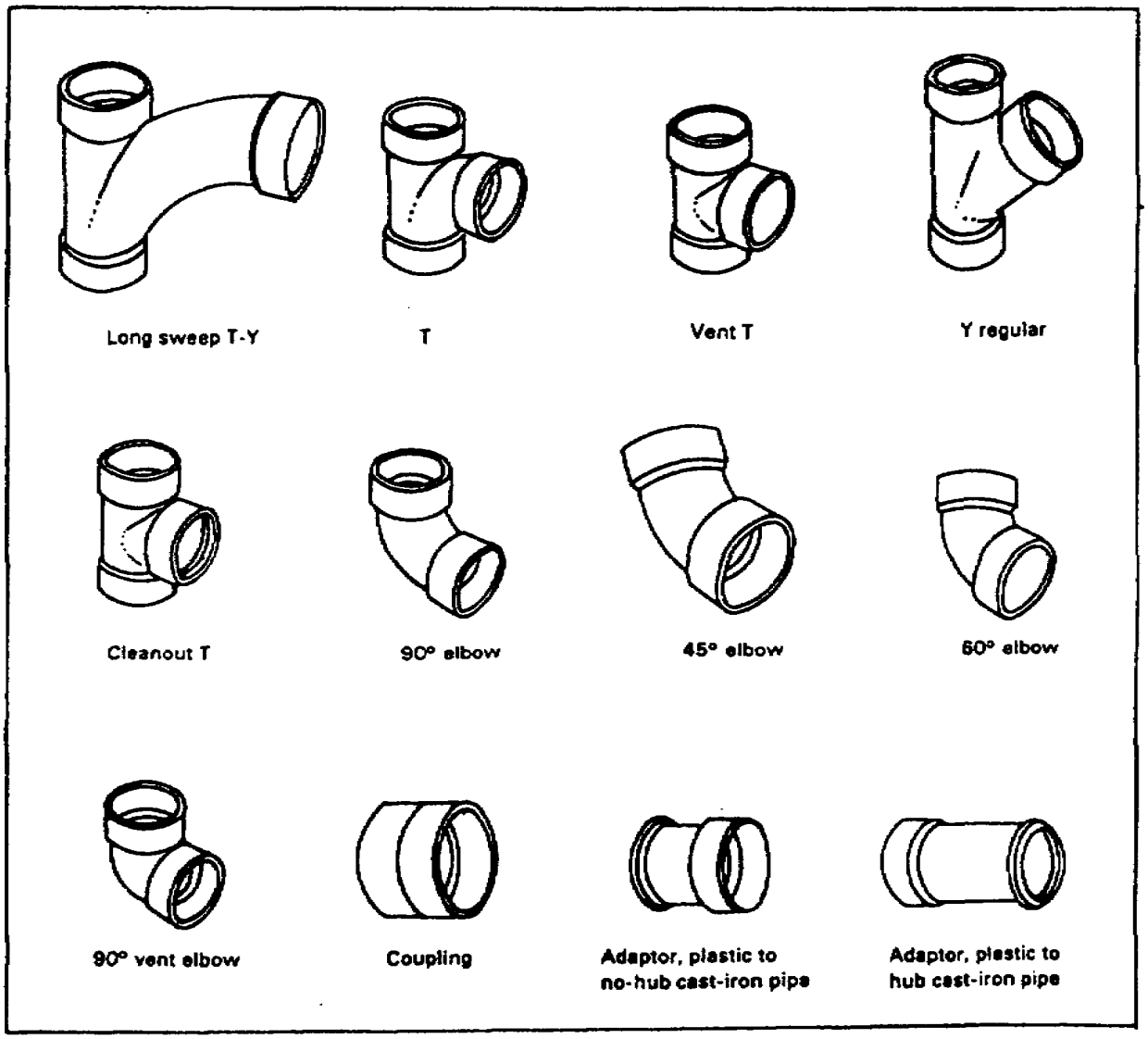

Lesson 1/Learning Event 4

Joint Connections

Joint connections for ABS and PVC plastic pipe are made with a solvent cement.

Types of cement. Use the following chart to determine which type of cements can be used with ABS and PVC pipe.

Types of cement that can be used for ABS and PVC pipe			
Pipe type	ABS cement	PVC cement	All purpose cement
ABS	●		●
PVC		●	●

Steps for making the joint connection. The joint connection on plastic pipe should be made as fast as possible without error because the solvent cement dries very quickly. Use the following steps:

Place the fitting on the pipe. Mark both the pipe and the fitting to show proper fitting direction.

Apply solvent cement to the outside of the pipe end.

Apply solvent cement to the inside of the fitting's marked end.

Place the fitting on the pipe, using a quarter turn to spread the cement evenly. Then line up the marks, and hold the fitting firmly to the pipe for at least 30 seconds.

Wipe off all excess cement.

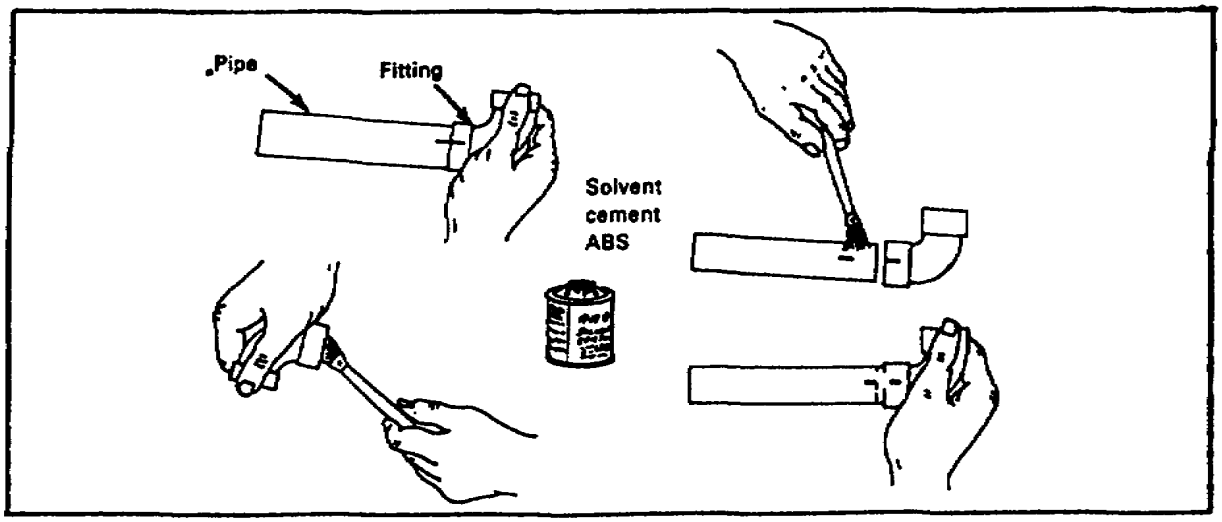

Lesson 1
Learning Event 4
SELF-CHECK EXERCISE

1. Match each plastic pipe fitting with its description.
   Adaptor, plastic to hub cast-iron pipe
   Vent tee
   Adaptor, plastic to no-hub cast-iron pipe
   90-degree vent elbow

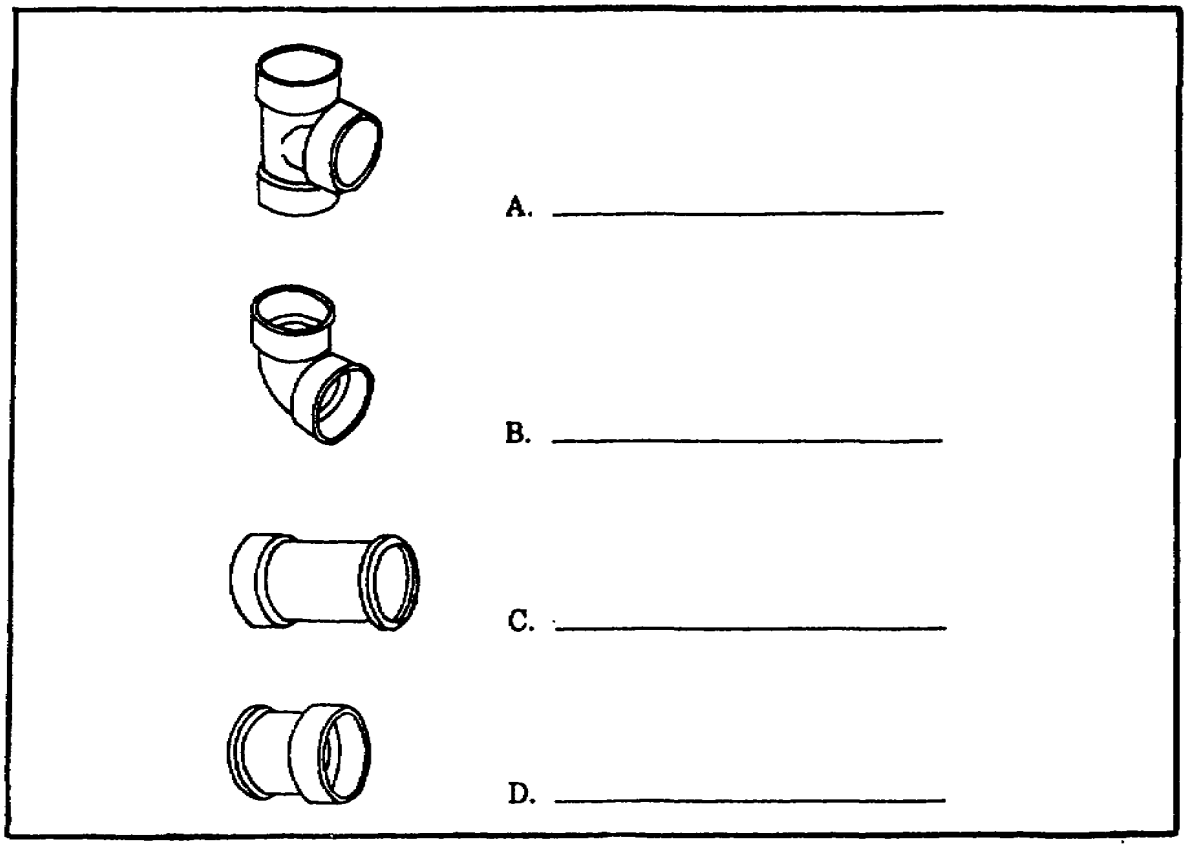

2. What type of solvent weld cement can be used to connect ABS plastic pipe joints?
   A. Styrene cement
   B. ABS cement
   C. PVC cement
   D. Portland cement

3. Where is the solvent cement applied to form a rigid plastic pipe joint?
   A. Inside of fitting only
   B. Outside of pipe end only
   C. Inside of fitting and outside of pipe end
   D. Outside of pipe end and fitting end

SELF-CHECK EXERCISE SOLUTIONS

1. A. Vent tee
B. 90-degree vent elbow
C. Adaptor, plastic to hub cast-iron pipe
D. Adaptor, plastic to no-hub cast-iron pipe

2. B. ABS cement can be used for ABS plastic pipe

3. C. Solvent cement is applied to the outside of pipe end and to inside of fitting end to be attached.

If your responses are the same, GREAT. Continue on with the lesson. If not, go back and review the material.

Learning Event 5:
IDENTIFYING FITTINGS AND USING JOINT CONNECTIONS FOR GALVANIZED STEEL PIPE

This learning event illustrates threaded drainage fittings for galvanized steel pipe. This learning event also explains how to make a threaded joint connection on galvanized steel pipe.

Fittings

Drainage fittings for galvanized steel pipe used in a waste system are cast with a recessed shoulder. This design allows a smooth flow of waste material. The illustration below shows threaded drainage fittings.

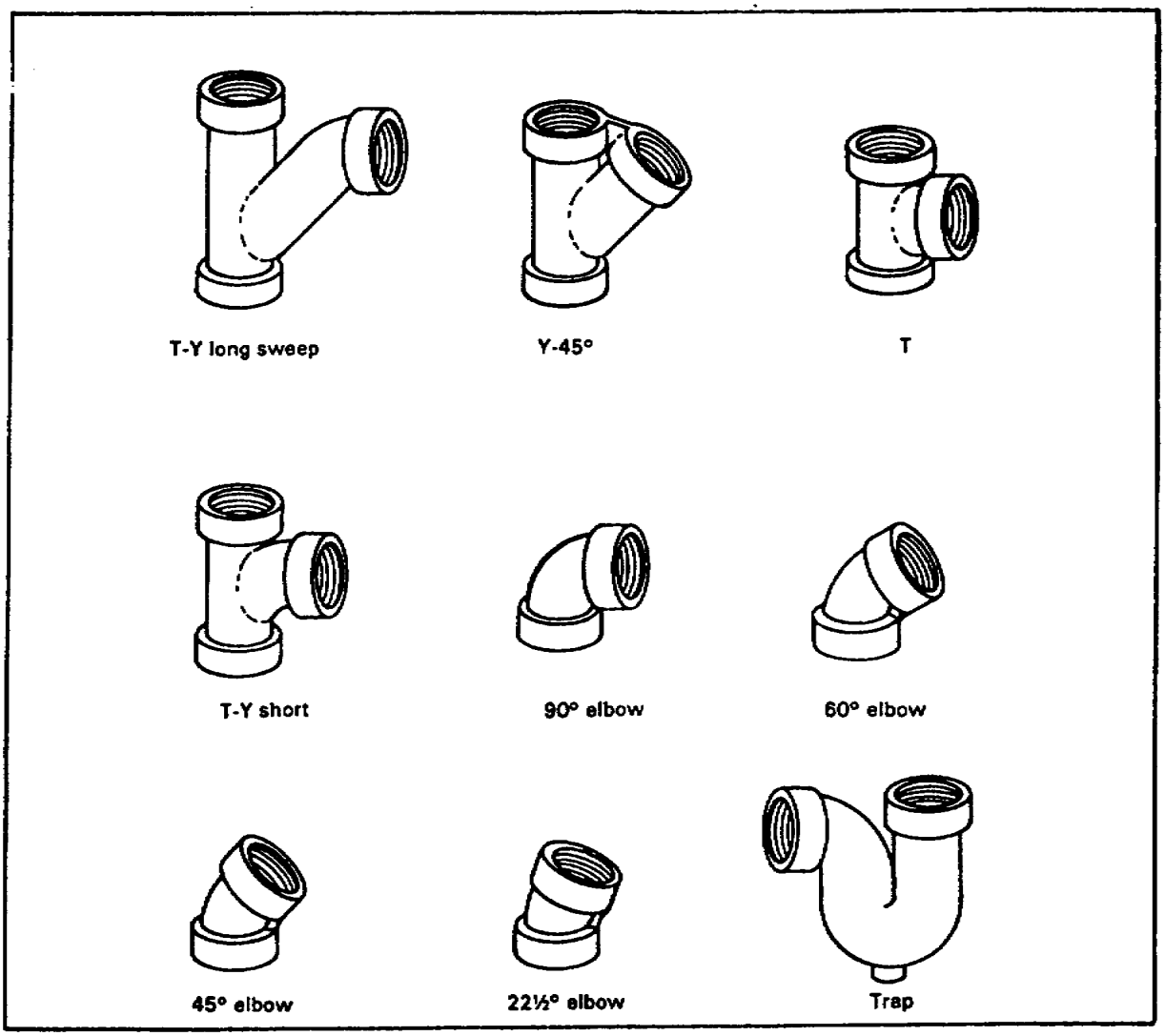

Lesson 1/Learning Event 5

Joint Connections

Slope of horizontal drainage pipes. The threads of drainage fittings are at a slight angle. This angle causes horizontal drainage pipes to slope approximately ¼ inch per foot.

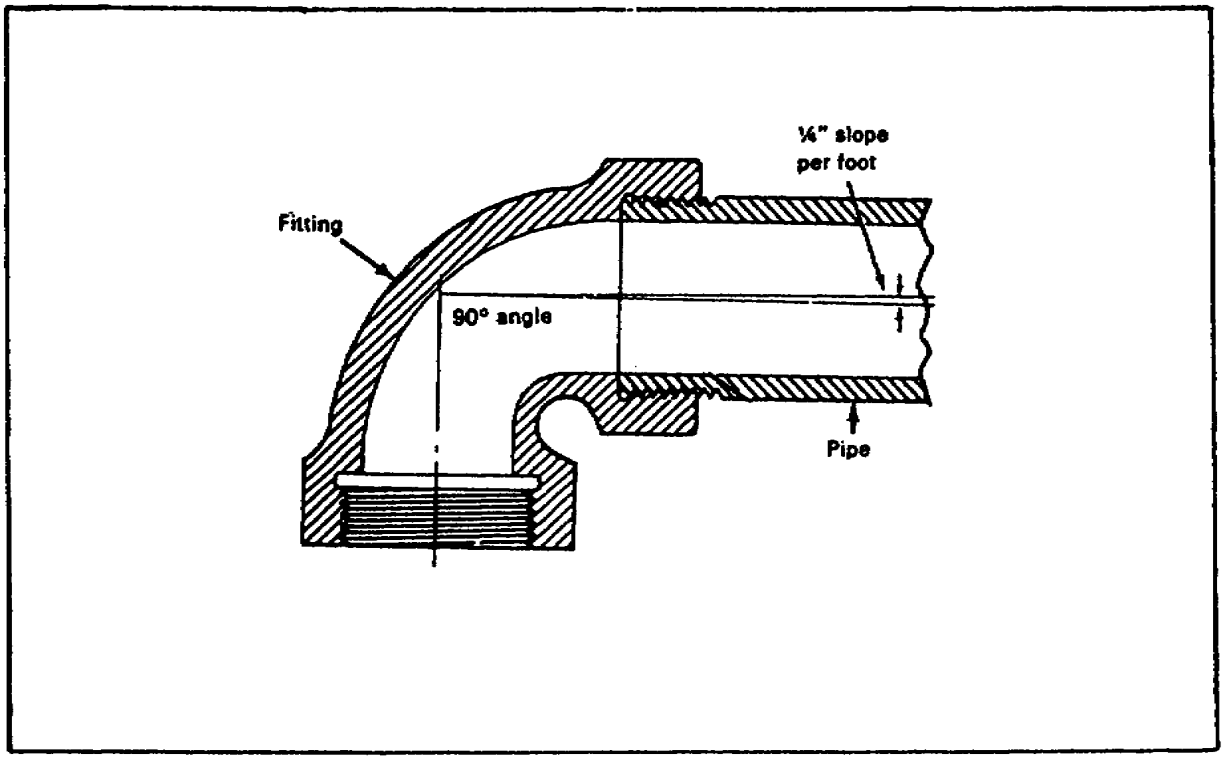

Steps for making the Joint connection. To make a threaded joint connection, use the following steps:

Apply pipe joint compound or Teflon tape, in a counterclockwise direction, to the pipe threads.

Screw the fitting onto the pipe until it is hand tight.

Tighten the fitting using two pipe wrenches-one to hold the pipe, and the other to tighten the fitting by turning clockwise.

Clean the joint with a rag.

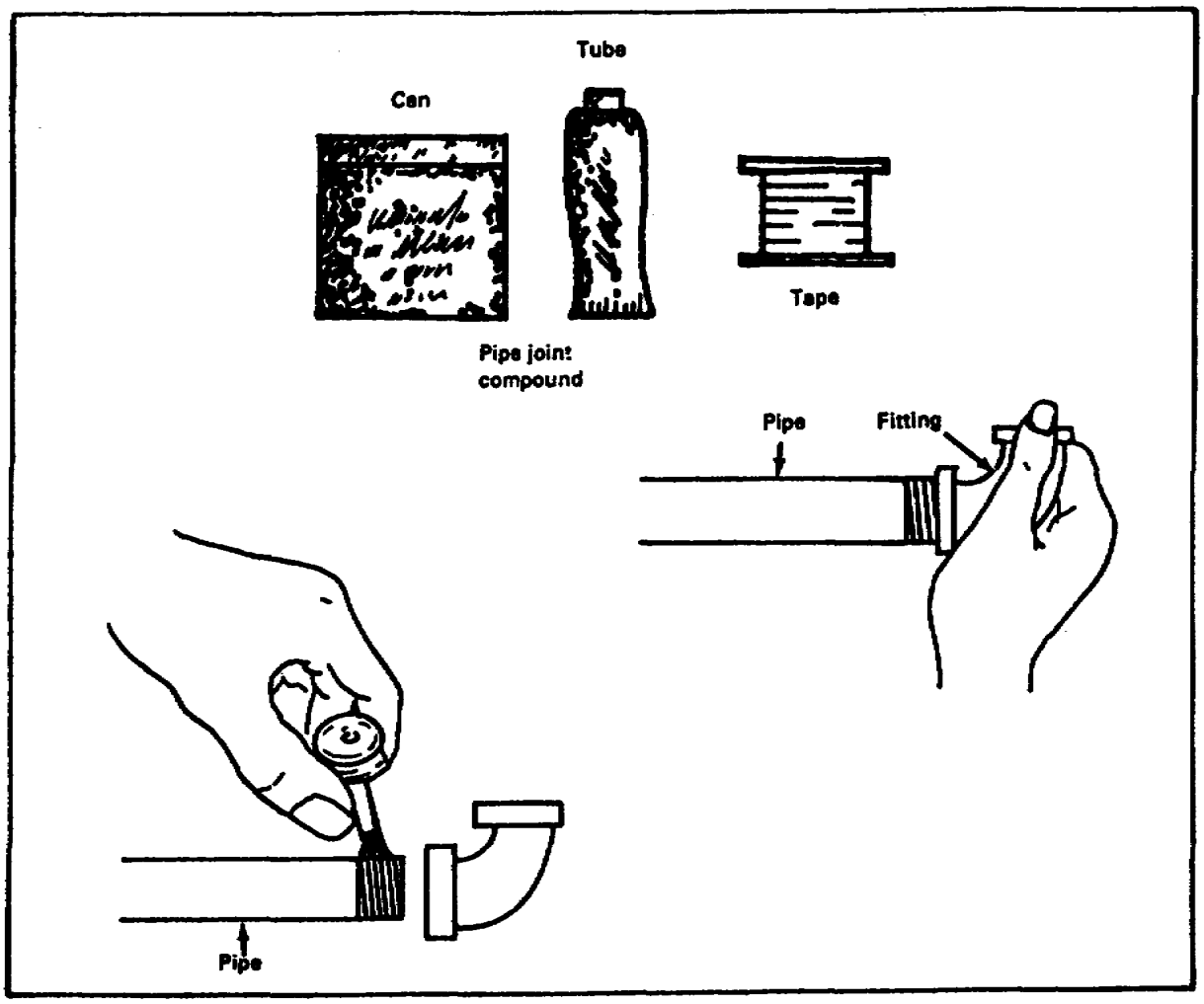

Lesson 1
Learning Event 5
SELF-CHECK EXERCISE

1. Match the galvanized pipe fittings with their description.
   60-degree elbow
   T-Y, long sweep
   Trap
   22½ -degree elbow

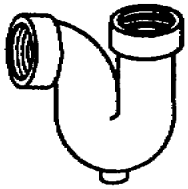

A. _____

B. _____

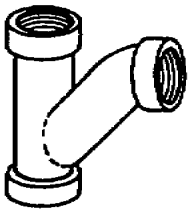

C. _____

D. _____

2. Which fitting, A or B, is a steel pipe drainage fitting? Circle one.
   A.
   B.

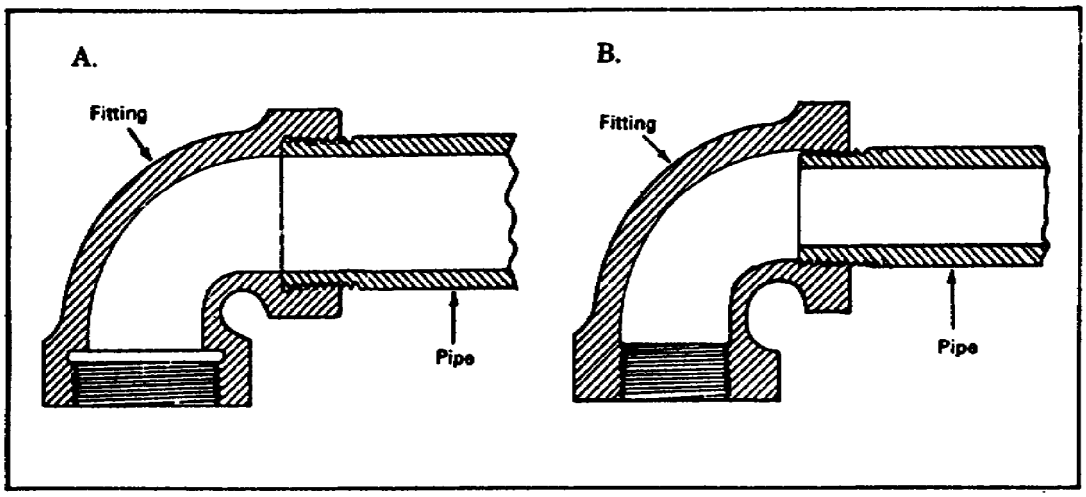

Fill in the blanks.

3. Pipe joint compound is applied to the_____.

4. The fitting is screwed onto the pipe until it is_____and then tightened with wrenches.

Lesson 1 /Learning Event 5

SELF-CHECK EXERCISE SOLUTIONS

1. *A. Trap*
   B. 22 ½-degree elbow
   C. T-Y, long sweep
   D. 60-degree elbow
2. *A*
3. *Pipe thread*
4. *Hand tight*

If your responses are the same, GREAT. Continue on with the lesson. If not, go back hand review the material.

Learning Event 6:
IDENTIFYING FITTINGS AND USING
JOINT CONNECTIONS FOR RIGID COPPER TUBING

This learning event illustrates fittings used for rigid copper tubing (DWV). This learning event also explains how to make a soldered joint connection on rigid copper.

Fittings

The illustration below shows fittings for rigid copper tubing (DWV).

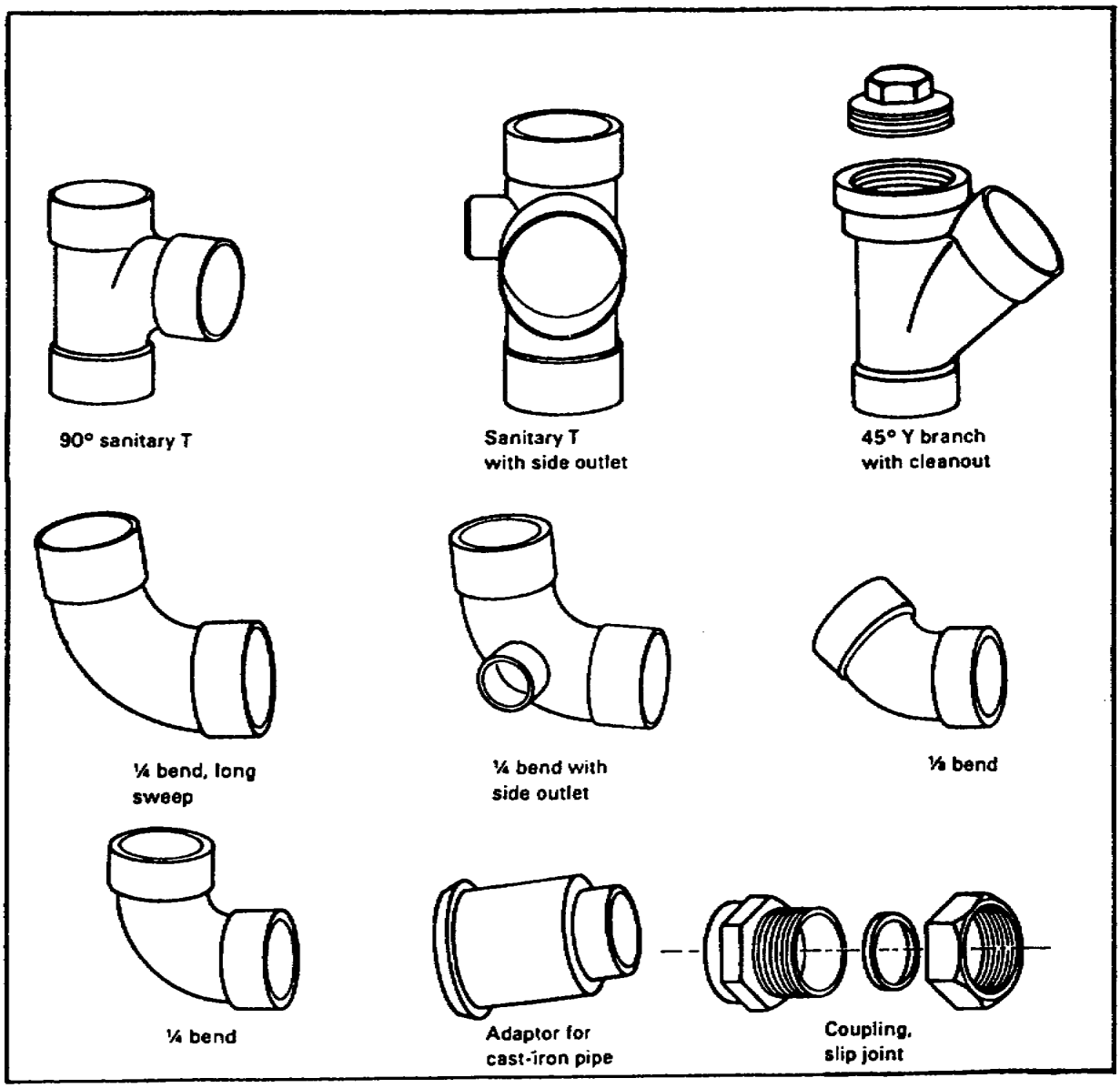

Lesson 1/Learning Event 6

Joint Connections

Joint connections for rigid copper tubing (DWV) are made with flux, solder, and a source of heat. The flux permits the even spreading of molten solder over the surfaces to be soldered. The molten solder flows into the space between the fitting and the tubing.

Steps for making the joint connection. Flux, 50-50 solder, and a torch are needed to make the joint. Use the following steps:

Apply flux to outside end of the tubing.

Apply flux to the inside end of a fitting.

Push the fitting onto the tubing, giving it a quarter turn to spread the flux evenly.

With the torch, apply heat *to the fitting only* until the flux begins to bubble.

Keeping the flame on the fitting, apply solder to the joint. Melt the solder around the joint. A well-soldered joint should have an even bead around the entire joint.

Remove the flame.

Clean the joint with a wet cool rag. Be careful not to burn your fingers.

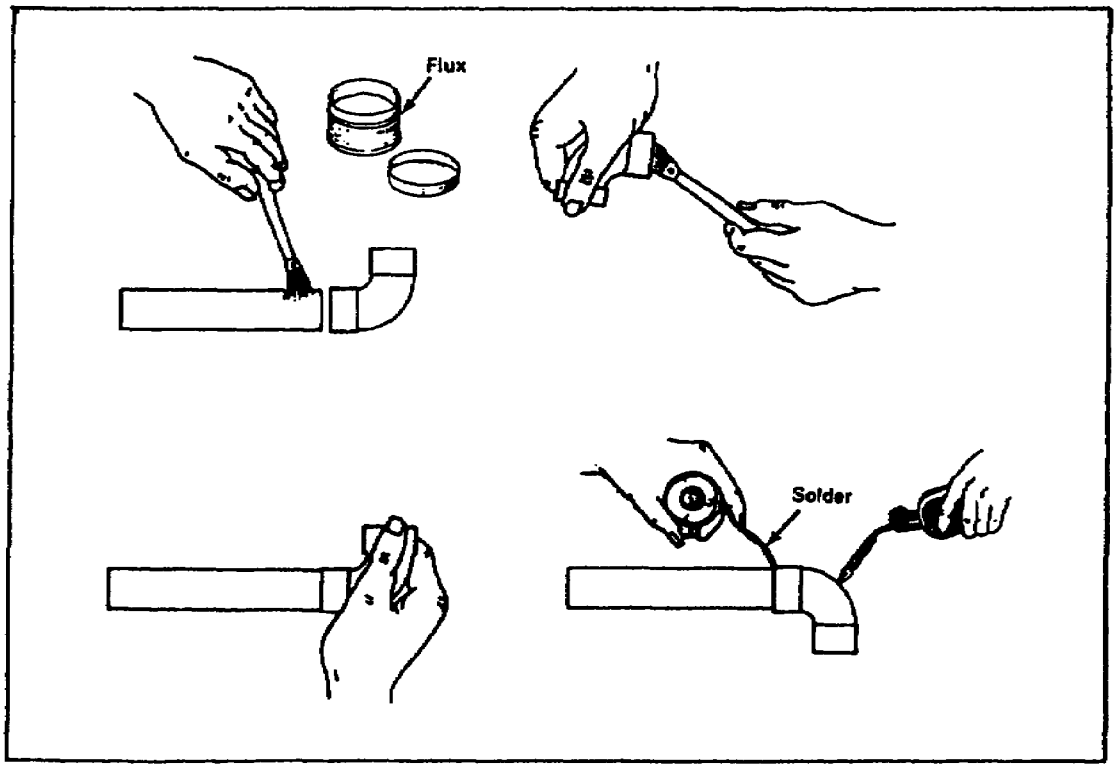

Lesson 1
Learning Event 6
SELF-CHECK EXERCISE

1. Match the rigid copper (DWV) fittings with their descriptions.
   Sanitary T with side outlet
   45-degree Y branch with cleanout
   Adaptor for cast-iron pipe
   ¼ bend, long sweep

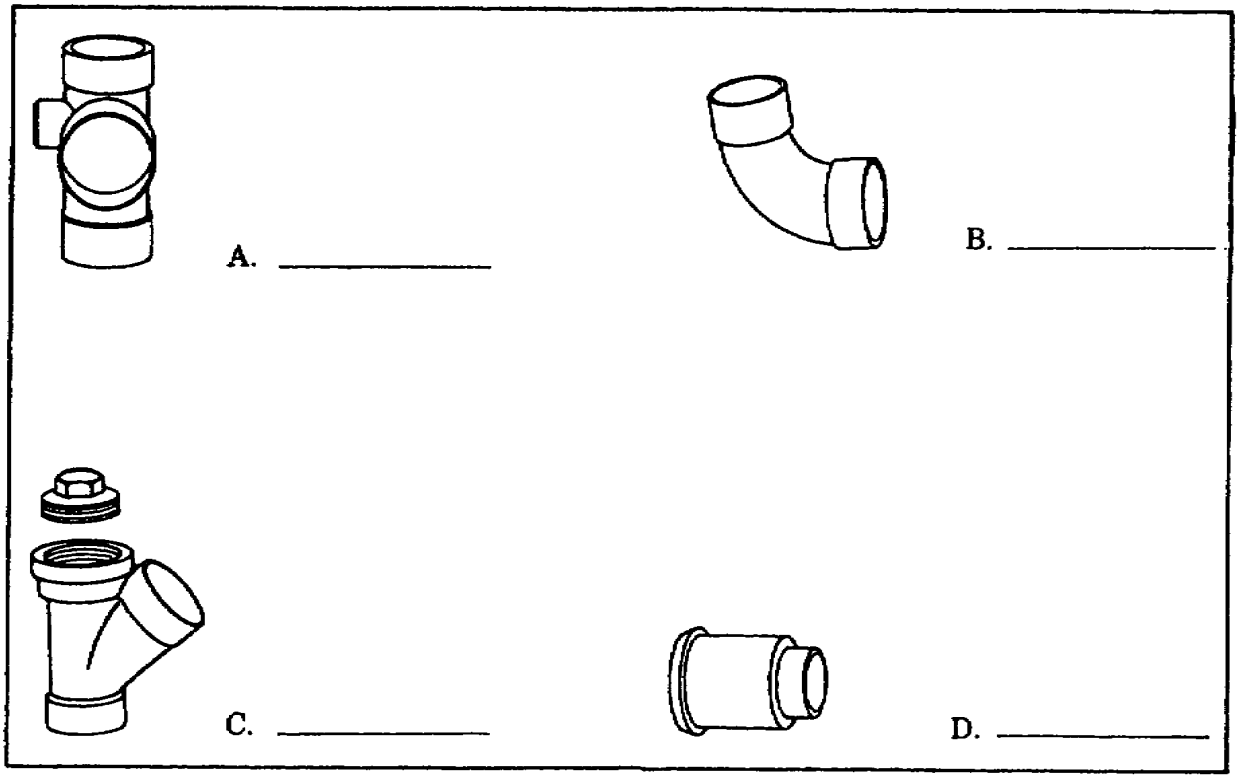

2. The soldering flux is spread evenly by giving the fitting a-
   A. Full turn
   B. ¾ turn
   C. ½ turn
   D. ¼ turn

3. To form a soldered joint, where is the heat applied?
   A. To the tubing
   B. To the fitting
   C. To the solder
   D. To the tubing and the fitting

Lesson 1/Learning Event 6

SELF-CHECK EXERCISE SOLUTIONS

1. *A. Sanitary T with side outlet*
   B. ¼ bend, long sweep
   C. 45-degree Y branch with cleanout
   D. Adaptor for cast-iron pipe
2. *D. The fitting is given a ¼ turn to spread the soldering flux evenly.*
3. *B. Heat only the fitting.*

If your responses are the same, GREAT. Continue on with the Review Exercise. If not, go back and review the material.

Lesson 1
REVIEW EXERCISE

Check your understanding of Lesson 1 by completing this review exercise. Try to answer all of the questions without looking back at the lesson. When you are finished, turn to the solutions at the end of the exercise and check your responses. If you missed any, go back and restudy the information.

1. How many types of general piping can be used in a waste system?
   A. Four
   B. Three
   C. Two
   D. One

2. From the illustration below, what is the pipe engagement for 3-inch cast-iron soil pipe?
   A. 3 1/8 inches
   B. 3 inches
   C. 2¾ inches
   D. 2½ inches

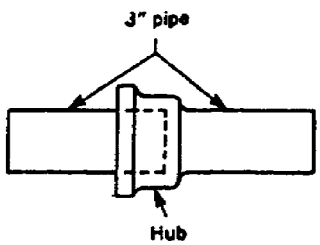

PIPE SIZE (IN INCHES)	APPROXIMATE ENGAGEMENT INTO HUB (IN INCHES)
2	2 1/2
3	2 3/4
4	3
5	3

3. From the illustration below, what is the length of cast-iron soil pipe when you use an end-to-end measurement?
   A. 47½ inches
   B. 48½ inches
   C. 49½ inches
   D. 52½ inches

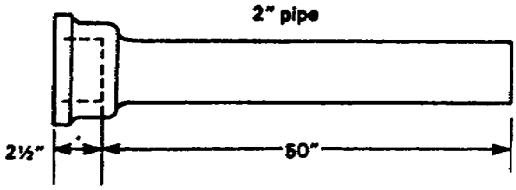

4. Which fitting, A, B, C, or D, shows a correct fitting dimension? Circle one.
   A.
   B.
   C.
   D.

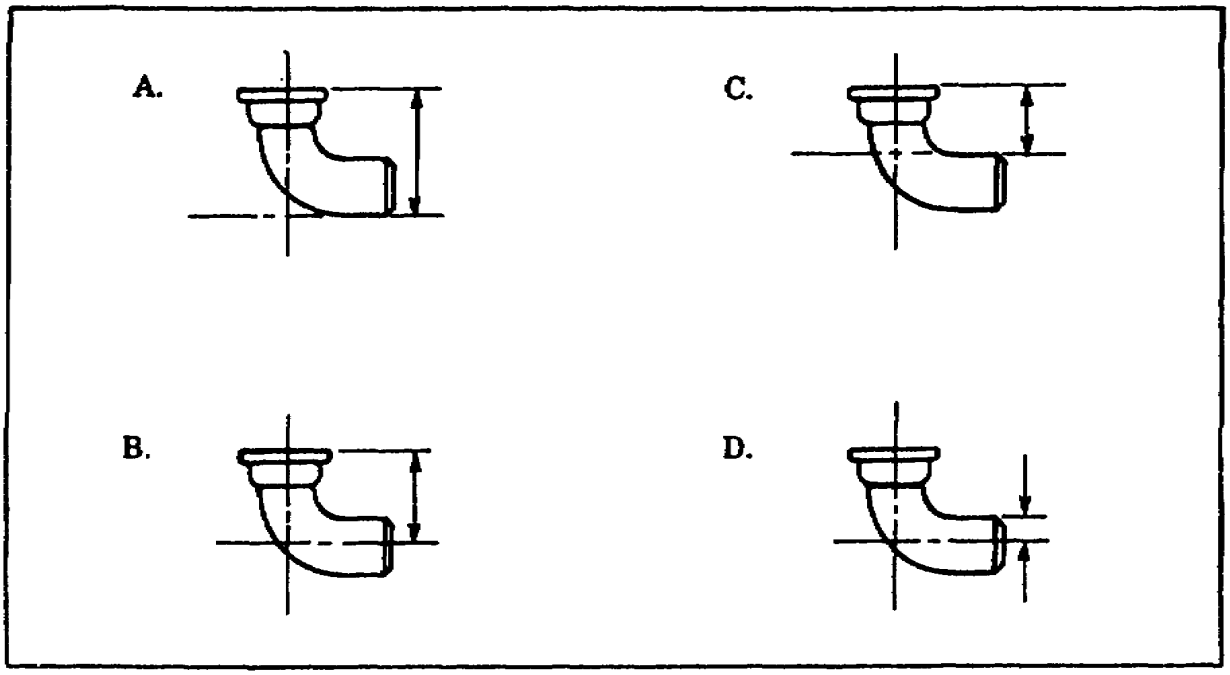

5. From the illustration below, what is the length of rigid copper tubing (DWV) when you use an end-to-center measurement?
   A. 47¾ inches
   B. 45¾ inches
   C. 44¾ inches
   D. 43¾ inches

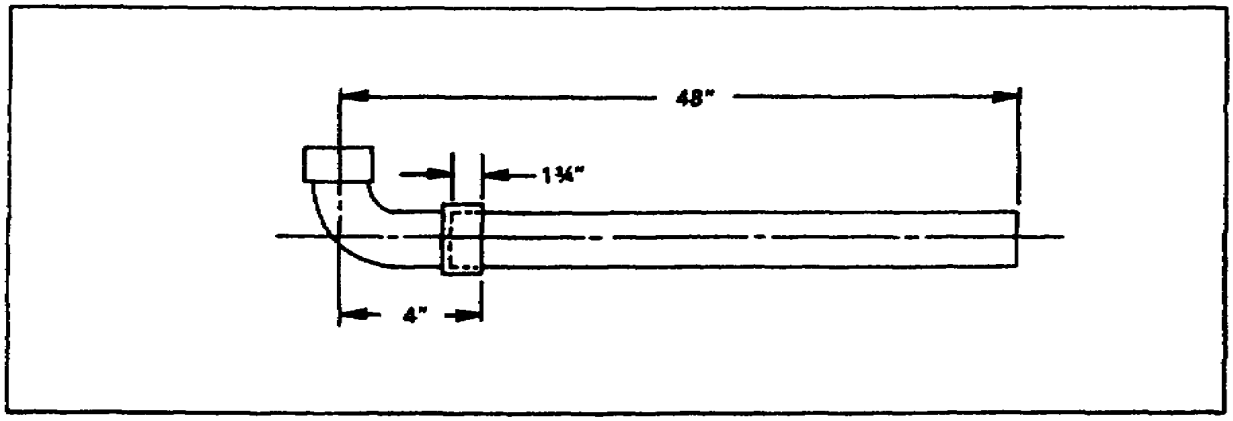

6. How is cast-iron soil pipe marked for cutting with a hammer and chisel?
   A. Mark top of pipe
   B. Mark bottom of pipe
   C. Mark completely around the pipe
   D. Mark hub of pipe

7. What two tools are used to cut cast-iron pipe?
   A. Hammer and short chisel
   B. Hammer and long chisel
   C. Hammer and cold chisel
   D. Hammer and curved chisel

8. What tool is used to cut ABS and PVC plastic pipe?
   A. Knife
   B. Hacksaw
   C. Coping saw
   D. Back saw

9. What is the final step required to prepare ABS and PVC plastic pipe for a joint connection?
   A. Remove gloss from inside of pipe end
   B. Remove gloss from outside of pipe end
   C. Remove gloss from inside and outside of pipe end
   D. Remove gloss from outside of pipe end and fitting

10. What tool is used to cut galvanized steel pipe?
   A. Hydraulic pipe cutter
   B. Tube cutter
   C. Pipe cutter
   D. Soil pipe cutter

11. A completely threaded steel pipe should extend how many inches beyond the die stock?
   A. 1/8 inch
   B. ¼ inch
   C. 3/8 inch
   D. ½ inch

12. What is the material used on rigid copper tubing (DWV) to bring the cut end to a bright shine?
   A. Sandpaper
   B. Emery cloth
   C. Cleaning solvent
   D. Clean rag

13. What is used to connect no-hub cast-iron soil pipe?
    A. Clamp
    B. Coupling
    C. Coupling and clamp
    D. Coupling and cement

14. What type of solvent weld cement is needed to connect ABS and PVC rigid plastic pipe?
    A. ABS cement
    B. Styrene cement
    C. Portland cement
    D. All purpose cement

15. Where is the solvent weld cement applied to form a joint for rigid plastic pipe?
    A. Outside ends of pipe and fitting
    B. Outside end of pipe only
    C. Outside end of pipe and inside end of fitting
    D. Inside end of fitting only

16. Where is the heat applied to make a soldered joint for rigid copper tubing (DWV) ?
    A. Pipe
    B. Flux
    C. Fitting
    D. Solder

17. Where is the joint compound applied for a threaded drainage fitting joint for steel pipe?
    A. Fitting threads only
    B. Pipe threads only
    C. Pipe and fitting threads
    D. All threads

THIS PAGE INTENTIONALLY LEFT BLANK.

Lesson 1/Review Exercise

REVIEW EXERCISE SOLUTIONS

1. *A (Page 3)*
2. *C (Page 9)*
3. *D (Page 14)*
4. *B (Page 13)*
5. *B (Page 15)*
6. *C (Page 20)*
7. *C (Page 21)*
8. *B (Page 22)*
9. *B (Page 23)*
10. *C (Page 23)*
11. *B (Page 25)*
12. *B (Page 28)*
13. *C (Page 3)*
14. *D (Page 32)*
15. *C (Page 32)*
16. *C (Page 42)*
17. *B (Page 37)*

Lesson 2
WASTE SYSTEM ROUGHING-IN

OBJECTIVE

At the end of this lesson, you will be able to describe the procedures for installing cast-iron pipe for a rough-in waste system.

TASK

Task 051-248-1003, Install cast-iron pipe.

CONDITIONS

You will have subcourse booklet EN5112. You will work at your own pace and in your own selected environment with no supervision.

STANDARDS

Within approximately 8 hours, you will be able to study the lesson resources, answer the practice exercise questions, and select the correct response for each examination question. You must respond correctly to 70 percent of the examination questions in order to receive credit for the subcourse.

REFERENCES

FM 5-51K1/2
TM 5-551K

Lesson 2
WASTE SYSTEM ROUGHING-IN

Roughing-in is the installation of all parts of a waste system that can be completed before the installation of fixtures. These are the parts of a waste system that will be out of sight (behind walls and floors). These parts of a waste system must be carefully installed. After the walls and flooring are in place, it is difficult and expensive to make repairs to the rough-in waste system.

The rough-in waste system includes a building drain line, stack, branch lines, venting, and fittings. The building drain line ties into the building sewer line. Of the four types of piping discussed in Lesson One, cast-iron and plastic are most often used in a rough-in waste system. No matter which type of piping is used, the process of roughing-in will be the same except for the joint connections.

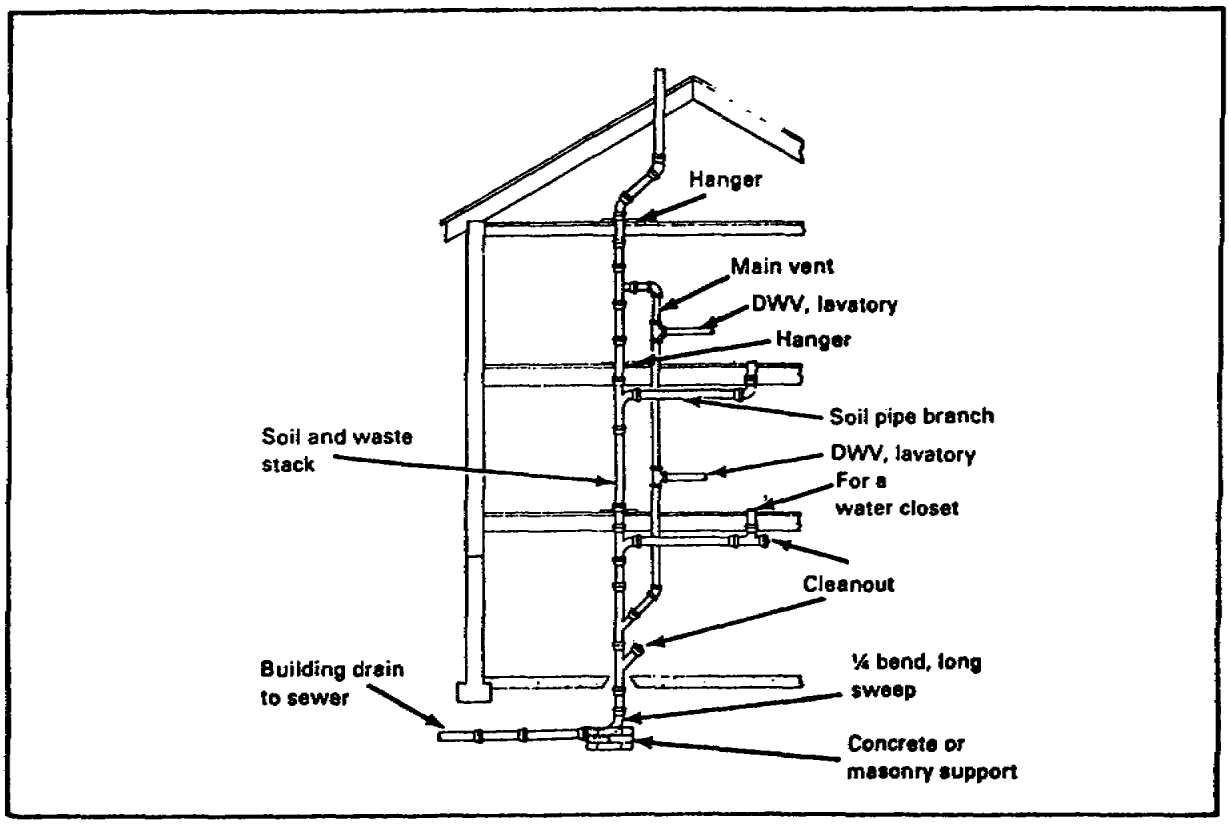

This lesson covers all the jobs involved in roughing-in a waste system-the installation of sewer pipelines, drain lines, stacks, venting, and piping material. This lesson also covers the methods for supporting pipeline runs and testing a system for leaks.

Learning Event 1:
INSTALLING SEWER PIPELINES

When a building foundation is under construction, the building sewer pipeline is installed in the ground. First, a hole is cut in the main sewer line. Then a fitting is attached to the main sewer line. Finally the building sewer pipeline is laid, supported, and connected at the correct grade slope.

Connecting the Building Sewer Pipeline to the Main Sewer Pipeline

Cutting the hole in the main sewer pipeline. Cut a hole in the main sewer pipeline above the normal sewerage flow level. Use the following steps:

Place the fitting on the sewer pipeline where the fitting will be installed. Trace around the fitting with a crayon or chalk. This tracing marks where the hole will be cut.

With a hammer and cold chisel, score the mark to a depth of 1/8 inch.

Knock a hole in the center of the scored area with the hammer.

Starting from the hole and working outward to the scored mark, tap lightly with the hammer to widen the hole.

Continue until the hole is the correct size.

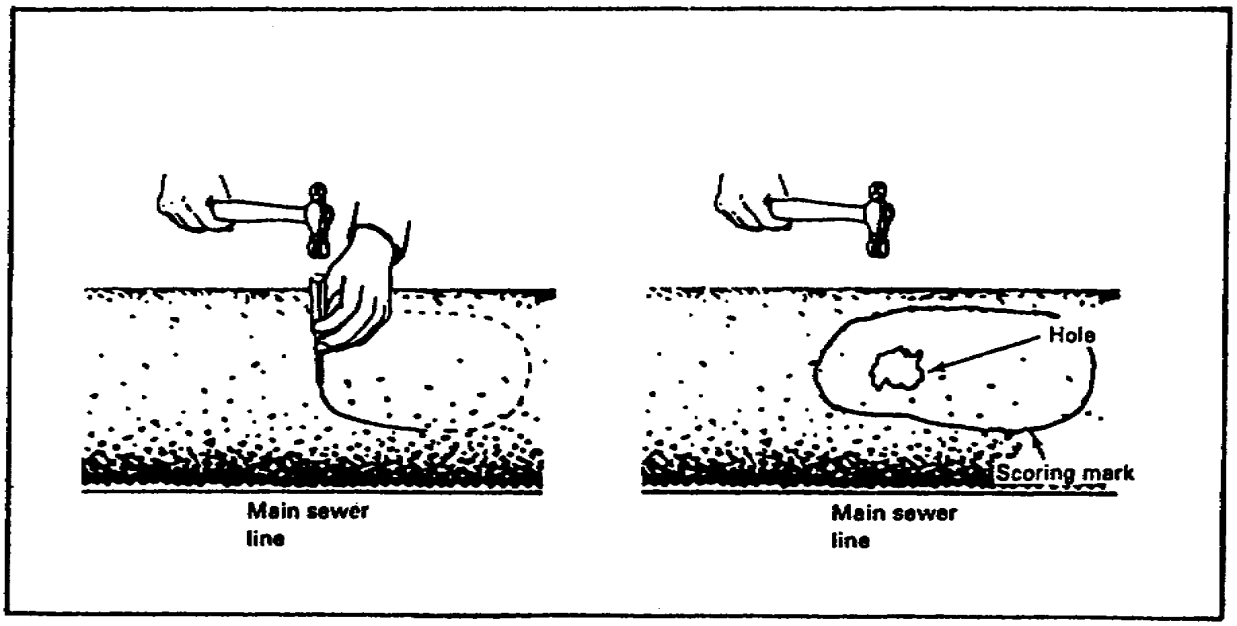

Installing the thimble. The thimble is the fitting that connects the main sewer pipeline to the building sewer pipeline. To install the thimble on the main sewer pipeline, use the following steps:

Place the thimble over the made-to-fit hole on the main sewer pipeline.

Support the thimble in place with pieces of scrap lumber.

Pack the connection with oakum and seal it with a portland cement mixture.

Do not remove the support until the joint sets.

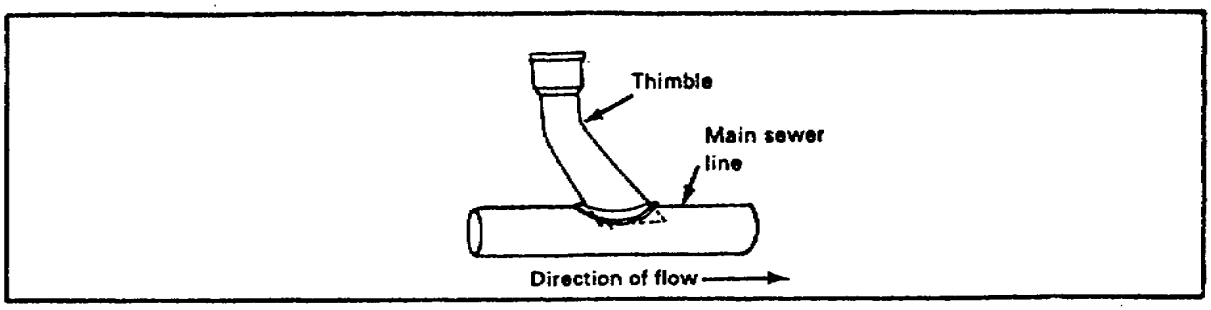

Laying the building sewer pipeline. Normally, cast-iron soil pipe is used for sewer pipelines. To install the building sewer pipeline, use the following steps:

Place the piping in a dug-out trench, one length at a time. Start at the sewer thimble and work toward the building.

Set the pipe to a grade slope of ¼ inch per foot with a carpenter's level.

Support the pipe to maintain the grade slope.

After all the pipes are set, make the joint connections.

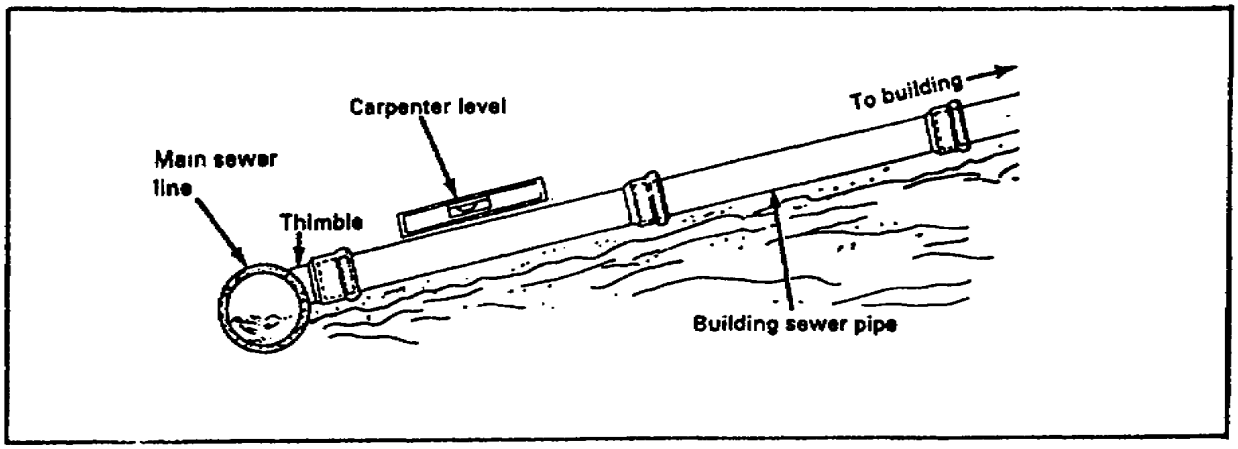

Lesson 2
Learning Event 1
SELF-CHECK EXERCISE

Fill in the blanks.

1. When attaching a building sewer pipeline to the main sewer line, mark the location on the main sewer line by tracing around the_____to be installed.

2. The mark is scored with a hammer and cold chisel to a depth of_____.

3. The sewer thimble fitting is supported in place and connected to the main sewer line with_____and_____.

4. A building sewer line is installed from the building to the main sewer with a grade slope of_____.

Lesson 2/Learning Event 1

SELF-CHECK EXERCISE SOLUTIONS

1. *Fitting*
2. *1/8 inch*
3. *Oakum and portland cement*
4. *inch per foot*

If your responses are the same, GREAT. Continue on with the lesson. If not, go back and review the material.

Learning Event 2:
INSTALLING DRAIN LINES AND STACKS

The building's drain line connects to the building sewer pipeline and continues to the point where the stack is to rise vertically. The building's drain pipe must be the same size as the building sewer pipe.

Installing the Building Drain Line

Installing a drain line under a foundation floor. Use the following steps:

Place the piping in a trench, one length at a time. Start at the building sewer pipeline and work towards the place where stack will be installed.

Set the pipe to a grade slope of ¼ inch per foot with a carpenters level. The slope will rise from the building sewer line to the stack.

Support the pipe at each connection to maintain the grade slope.

After all the pipes are set, make the joint connections. Use a ¼ bend, long sweep fitting at the location where the stack will be erected.

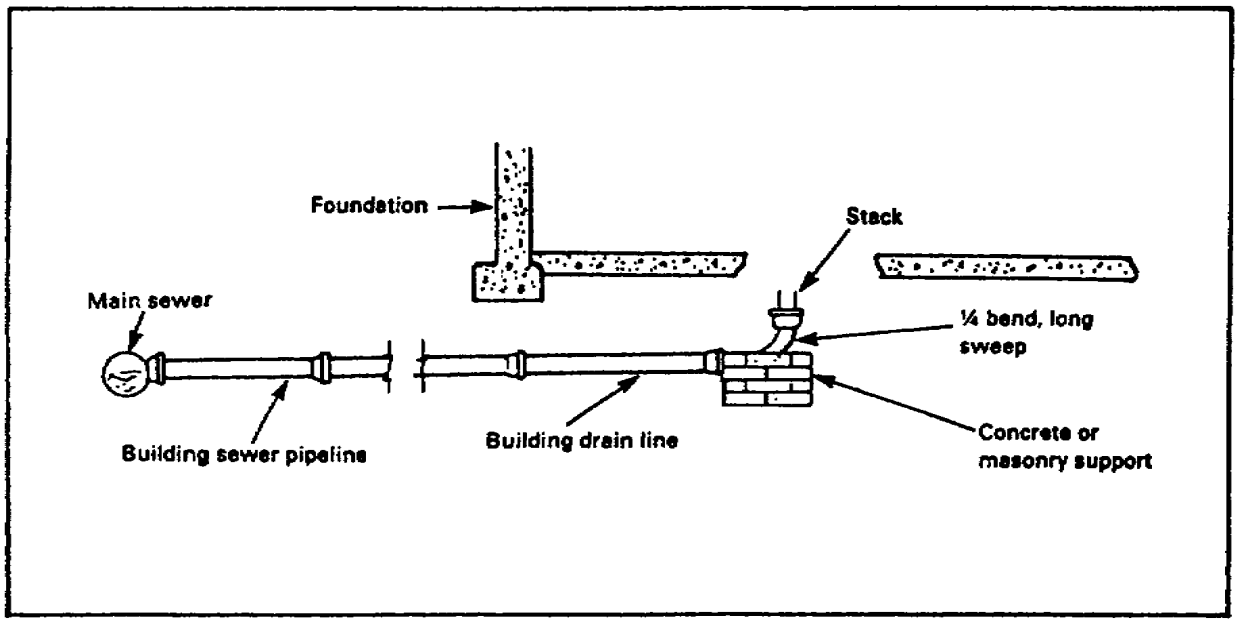

Lesson 2/Learning Event 2

Installing a building drain line through a foundation wall. Use the following steps:

Starting at the building sewer pipeline and using the proper grade slope, determine where the foundation wall will be cut. Mark the wall and then cut the hole.

Run a chalk line from the hole to the proposed location of the stack, still using a rising grade slope of ¼ inch per foot.

Place each length of pipe along the chalk line. Support the joint connections with hangers.

Place a 90-degree Y fitting to form the bottom of the stack.

Support it from the bottom.

Check pipe alignment and make the joint connections.

Patch the foundation wall where the pipe runs through.

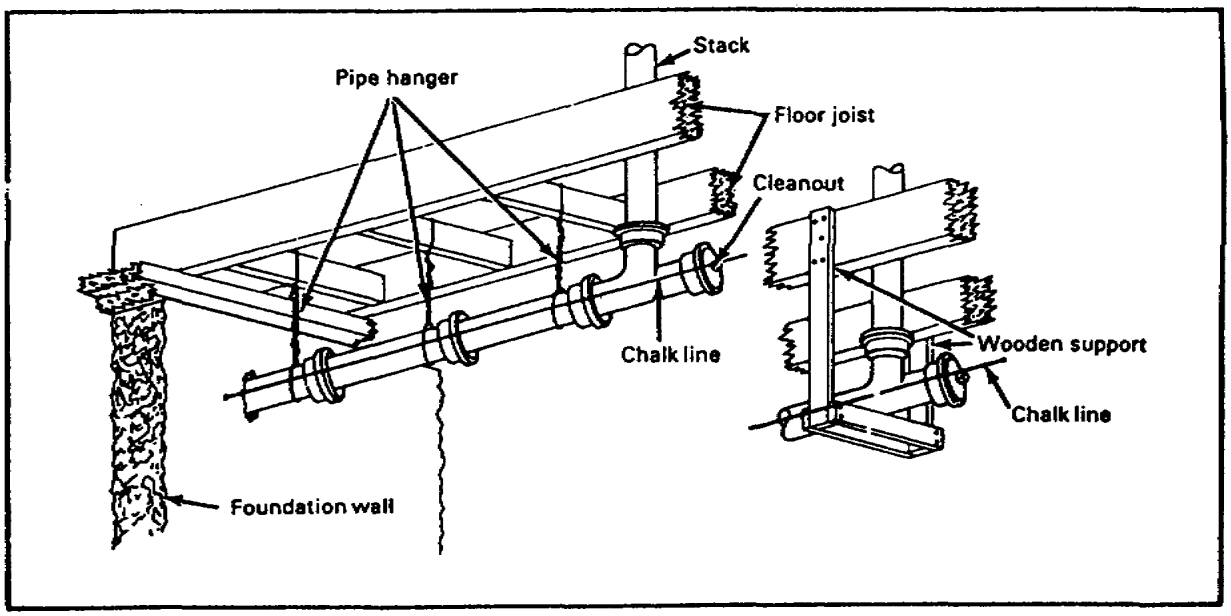

Installing the Stack

Sections of the stack. A combination of vertical pipes with fittings forms the stack in a plumbing waste system. It is used for waste disposal and venting. The main stack is composed of three sections--the soil stack, waste stack, and vent stack. A soil stack carries waste disposal from water closets. A waste stack carries waste disposal from all other fixtures. A vent stack provides air circulation throughout the waste system and allows for the release of sewer gases.

Placement of the stack. The stack runs in the building wall, up through each floor, and out through the roof. It is installed after the building framework is in place. Use the following steps:

Use a plumb line to insure the stack will be vertical.

Cut holes in the framework for running the stack vertically.

Set the pipes in place.

Support the fittings.

Be certain the vent stack rises at least 12 inches from the highest point of the hole cut through the roof.

Place cleanouts at possible waste stoppage points.

Make the joint connections.

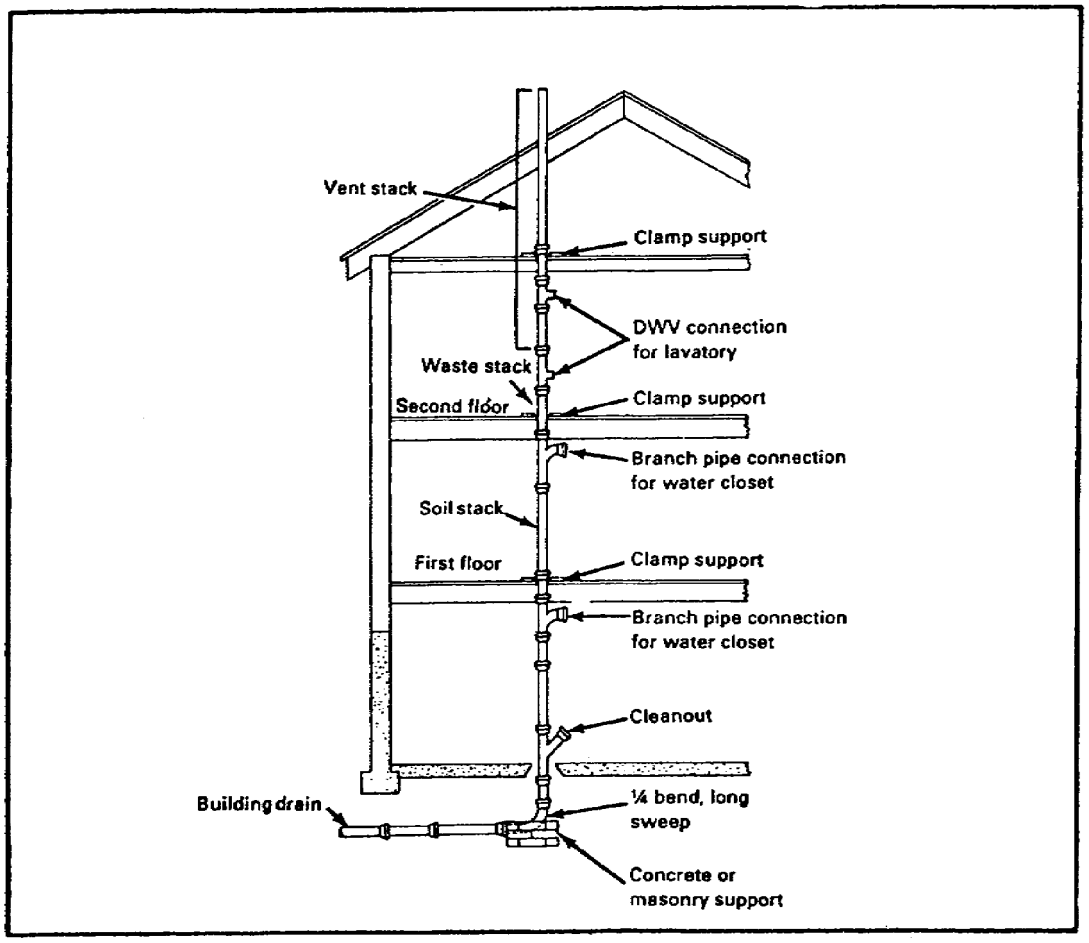

Connections to the stack. Branch lines are for disposal of wastes. All rough-in horizontal branch lines in the waste system must slope ¼ inch per foot toward the stack.

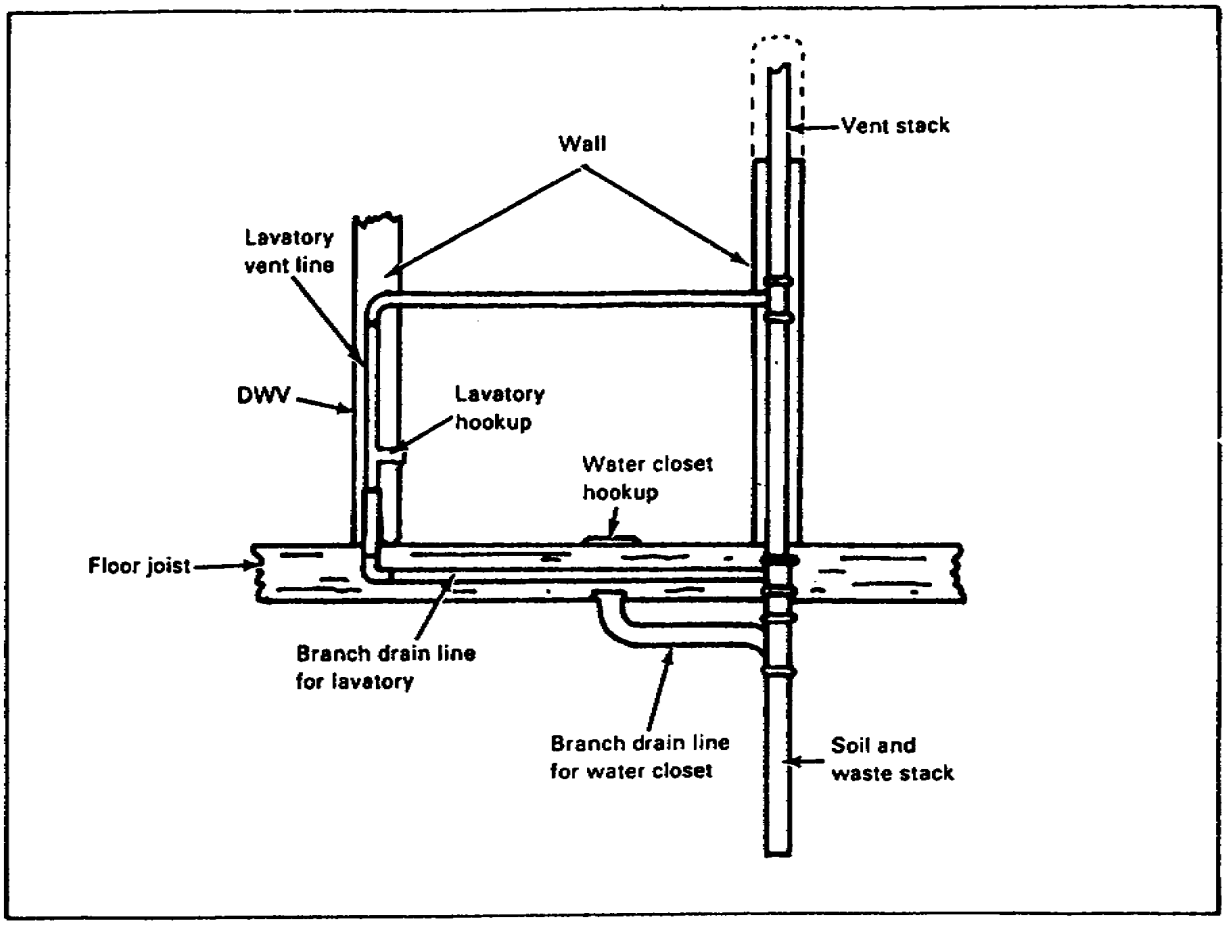

Lesson 2
Leaning Event 2
SELF-CHECK EXERCISE

1. Identify each lettered item in the waste system.
   A._____
   B._____
   C._____
   D._____

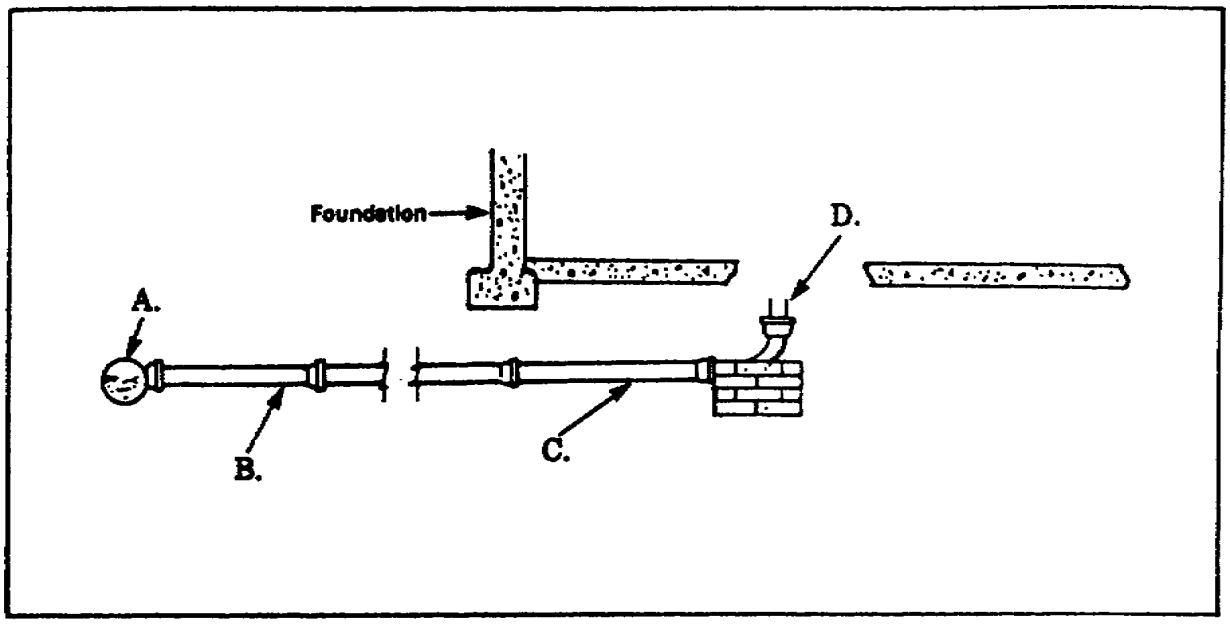

Lesson 2/Learning Event 2

2. Identify each lettered type of stack that composes a main stack.
   A._____
   B._____
   C._____

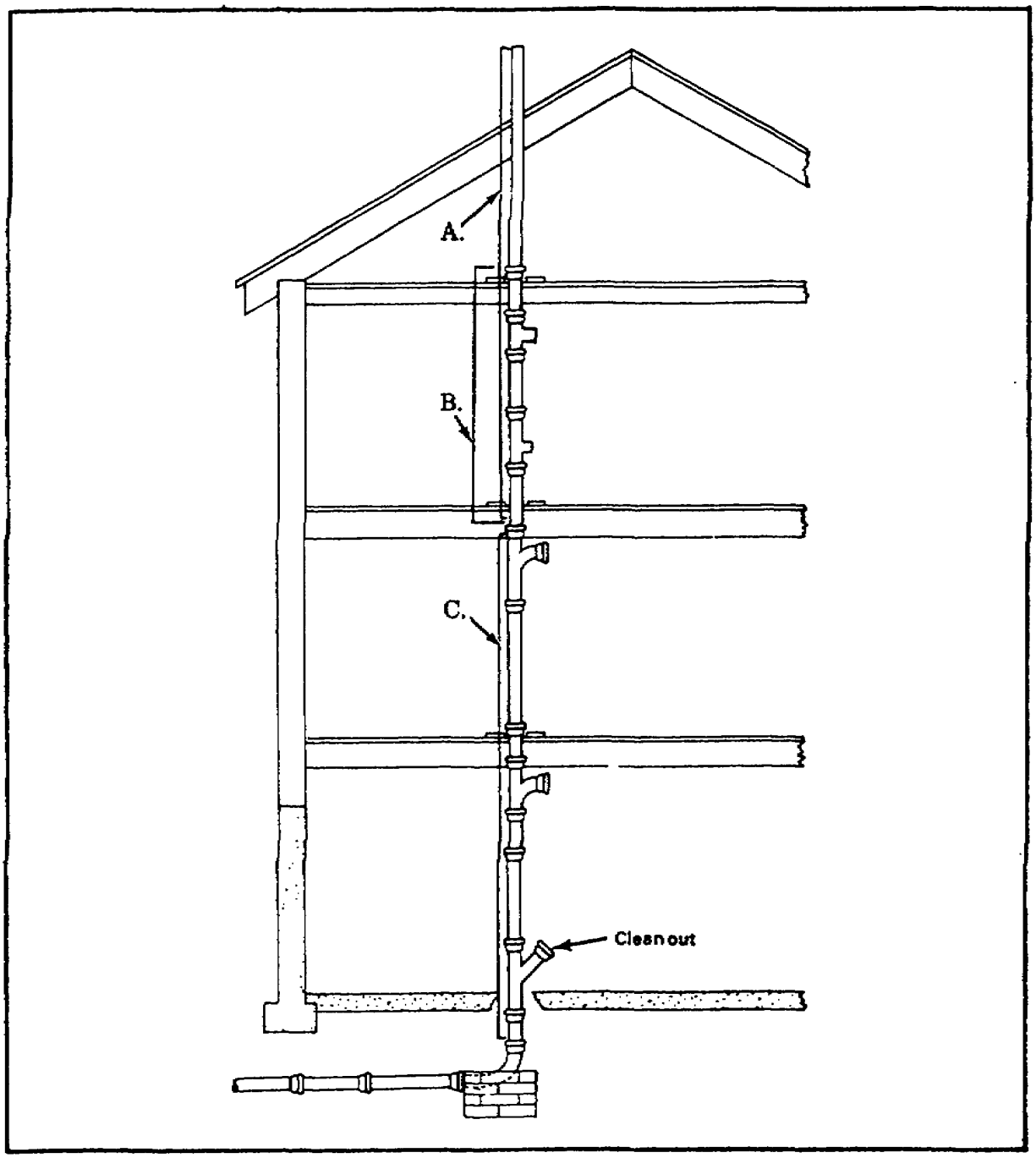

3. What is the minimum height that the vent stack must rise from the highest point of the hole cut through the roof?
   A. 8 inches
   B. 10 inches
   C. 12 inches
   D. 14 inches

4. Identify the horizontal waste system pipelines that must slope ¼ inch per foot toward the stack. Circle 2 of the 4 letters, A, B, C, or D.
   A.
   B.
   C.
   D.

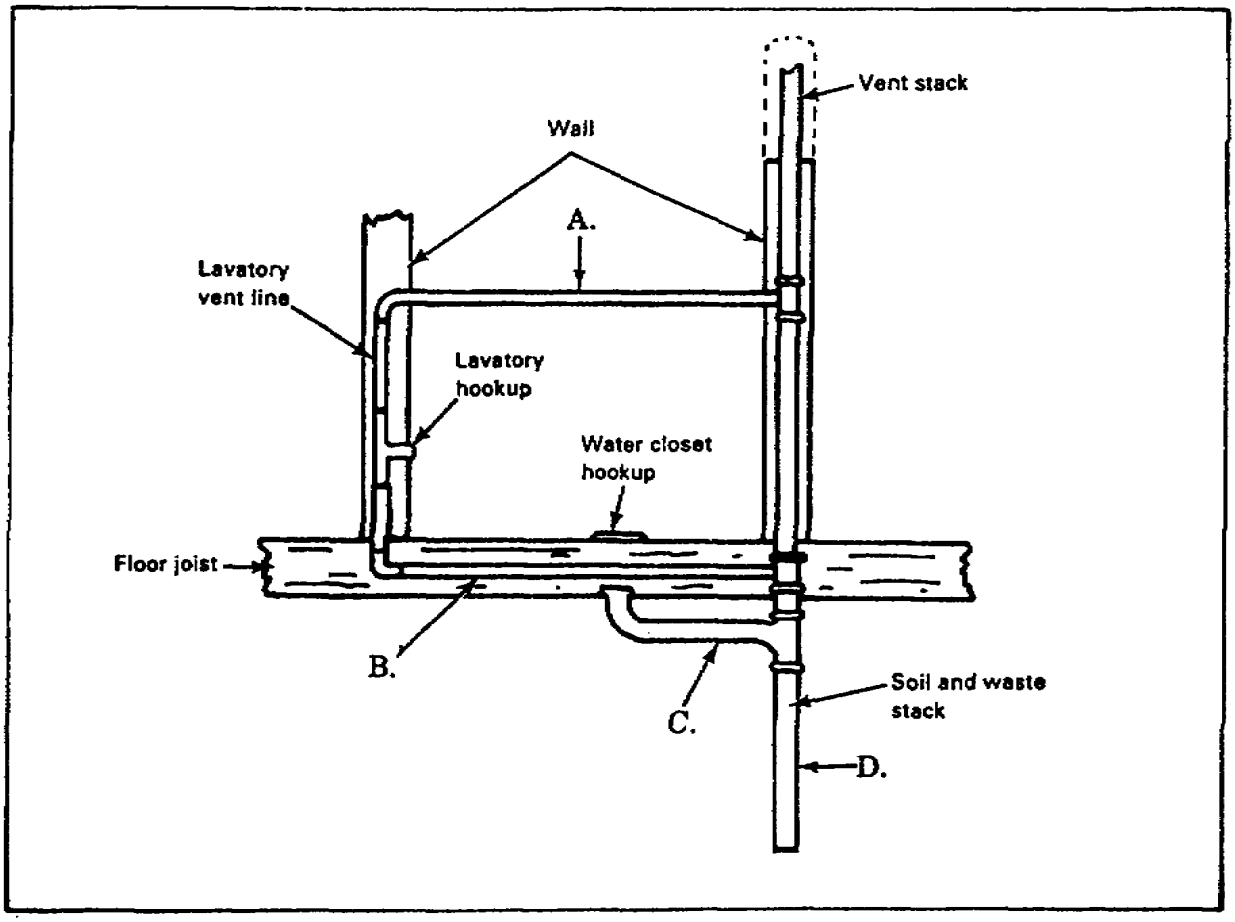

SELF-CHECK EXERCISE SOLUTIONS

1. A. Main sewer line
B. Building sewer line
C. Building drain line
D. Stack

2. A. Vent stack
B. Waste stack
C. Soil stack

3. C. The minimum height that the vent stack must rise is 12 inches from the highest point of the hole cut through the roof.

4. B and C must slope ¼ inch toward the stack.
B is the waste drain line for the lavatory.
C is the waste drain lie for the water closet.

If your responses are the same, GREAT. Continue on with the lesson. If not, go back and review the material.

Learning Event 3:
VENTING THE WASTE SYSTEM

The waste system is vented to allow free air circulation within the system, to reduce the pressure on trap seals, and to remove foul gas odors caused by sewerage. Venting must tie into the stack. The method used to vent the waste system depends on where the fixtures are to be located and how they are grouped. This learning event describes three methods-unit venting, wet venting, and circuit venting. This learning event also describes water seals and cleanout fittings.

Unit Venting

Unit venting allows two similar fixtures to use the same stack fitting. The waste drains of the two fixtures must be at the same height from the floor.

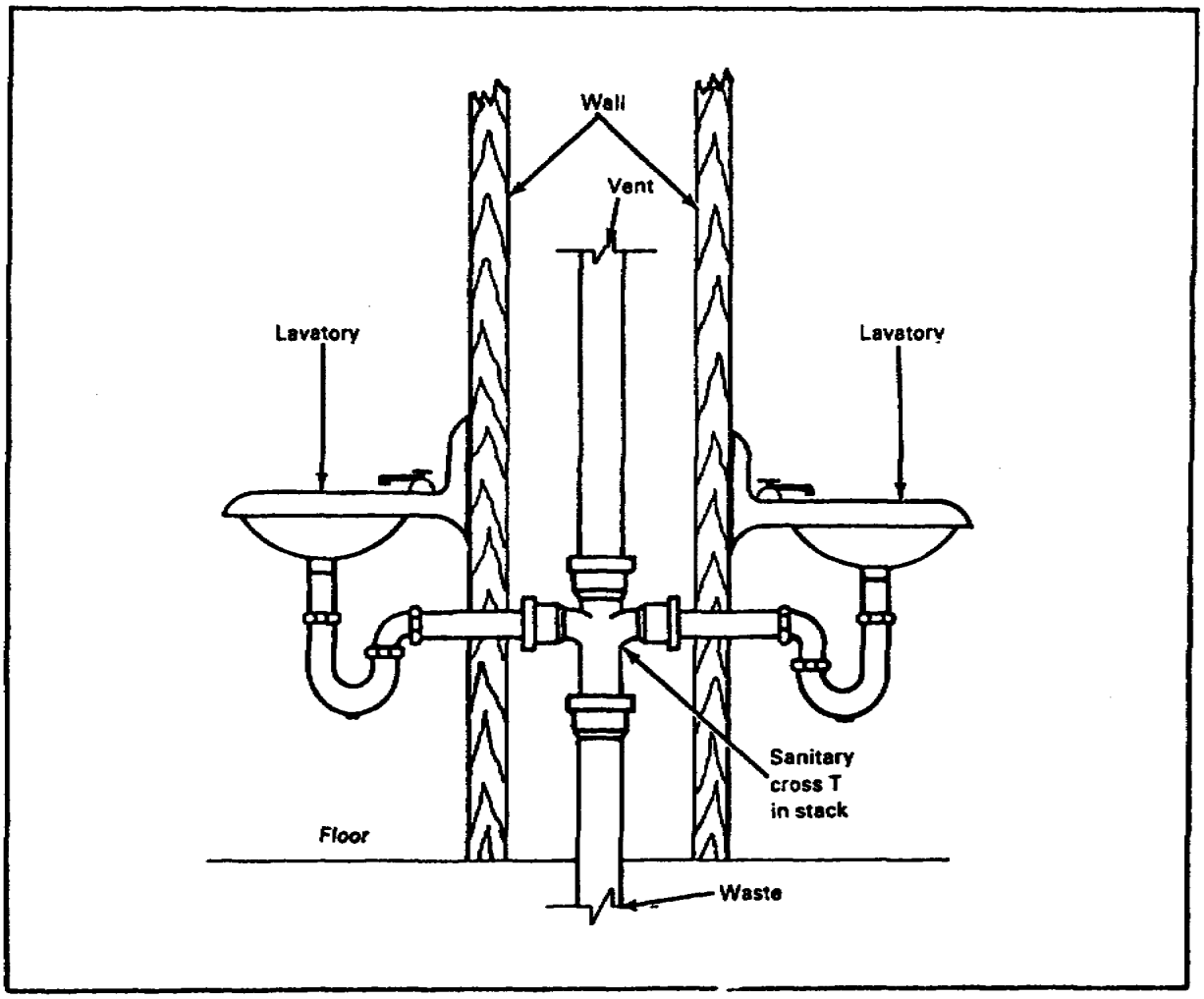

Wet Venting

Wet venting allows the drain line of one fixture to serve also as a vent line for another fixture. The size of the wet vent depends on the distance between trap outlets.

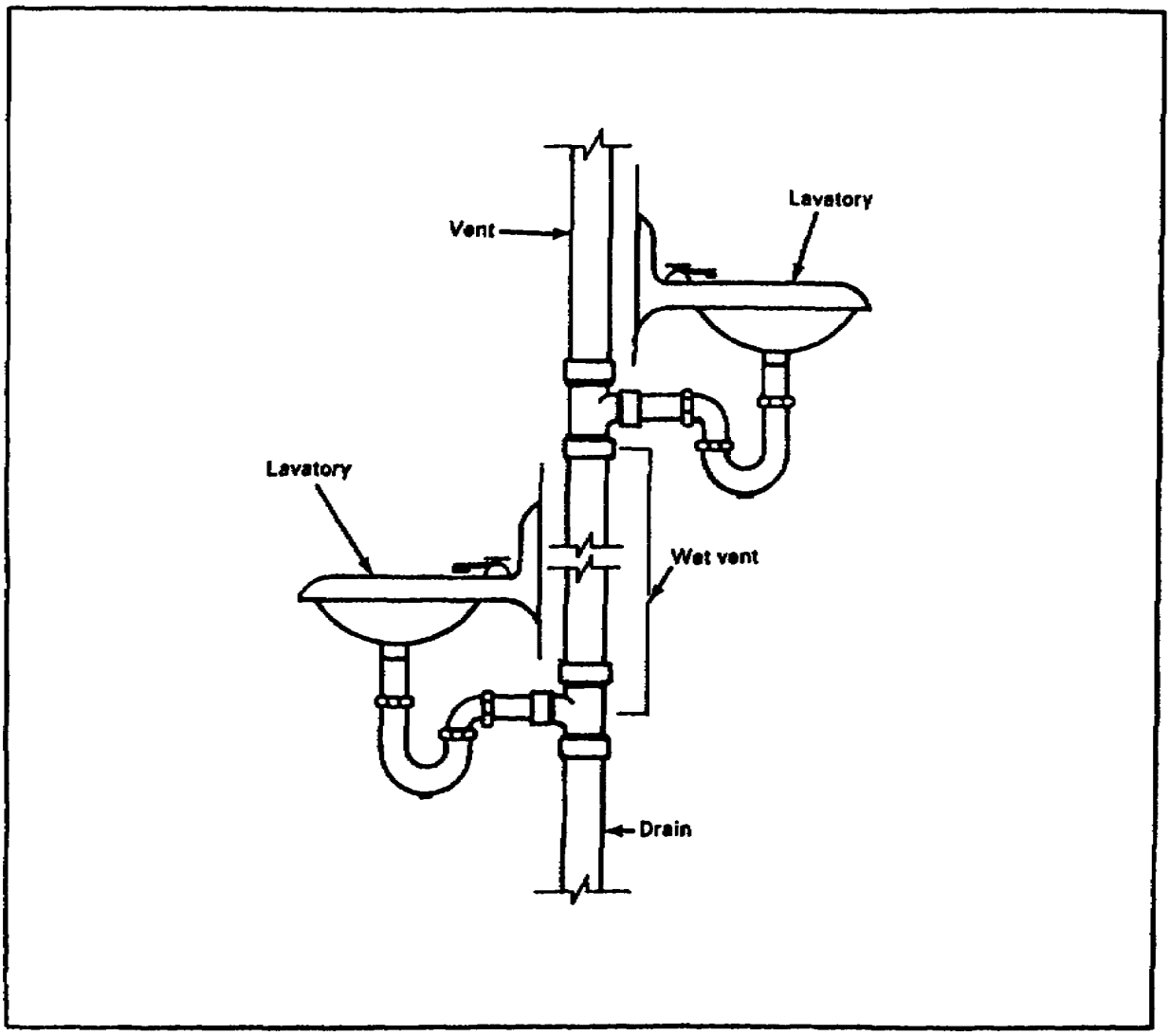

Circuit Venting

Circuit venting can be used when two or more fixtures, such as lavatories, are installed in a row. The circuit vent is connected to the waste drain line between the last two fixtures in the row. Then the circuit vent is connected to the main vent.

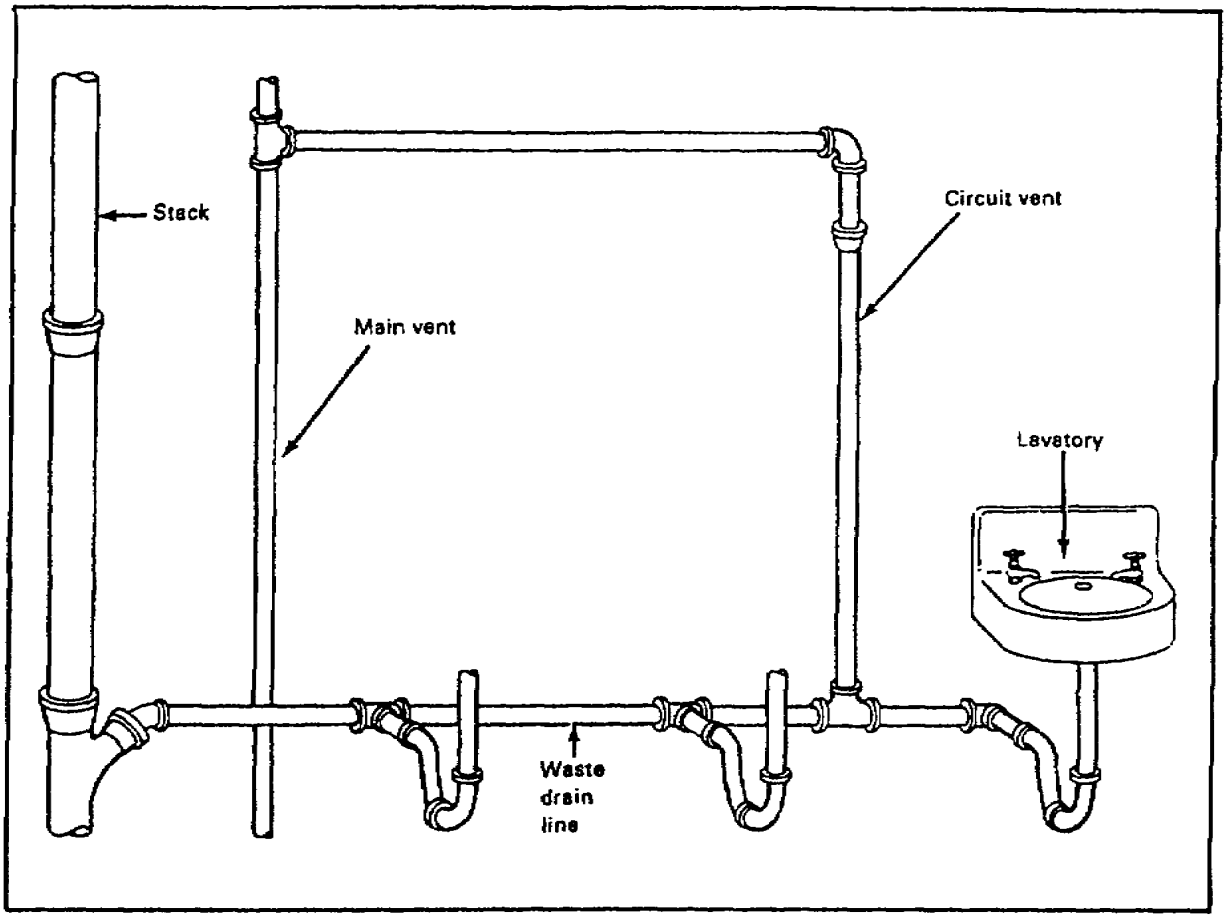

Water Seals

A water seal stops sewer gases from coming into the building. It is a column of water in a fixture trap. The column is maintained by the atmospheric pressure from the venting (14.7 pounds per square inch, at sea level).

Water seal for water closets. Water closets have built-in traps that provide a visible water seal.

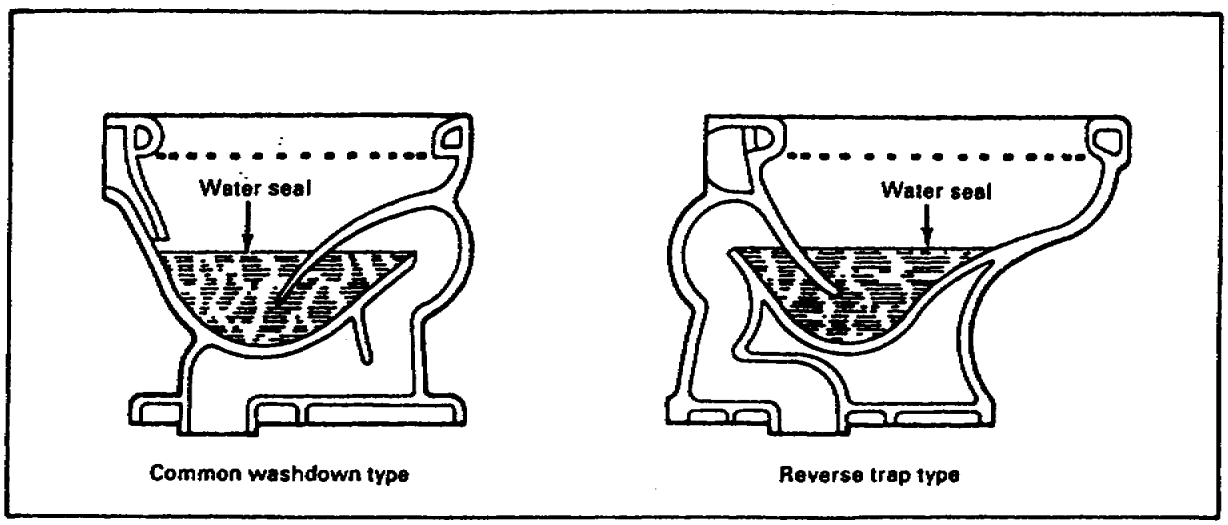

Water seal for other fixtures. Other fixtures require a P-trap to provide a water seal. The P-trap seal is a column of water (about 2 inches) between the trap's crown weir and the trap's top dip.

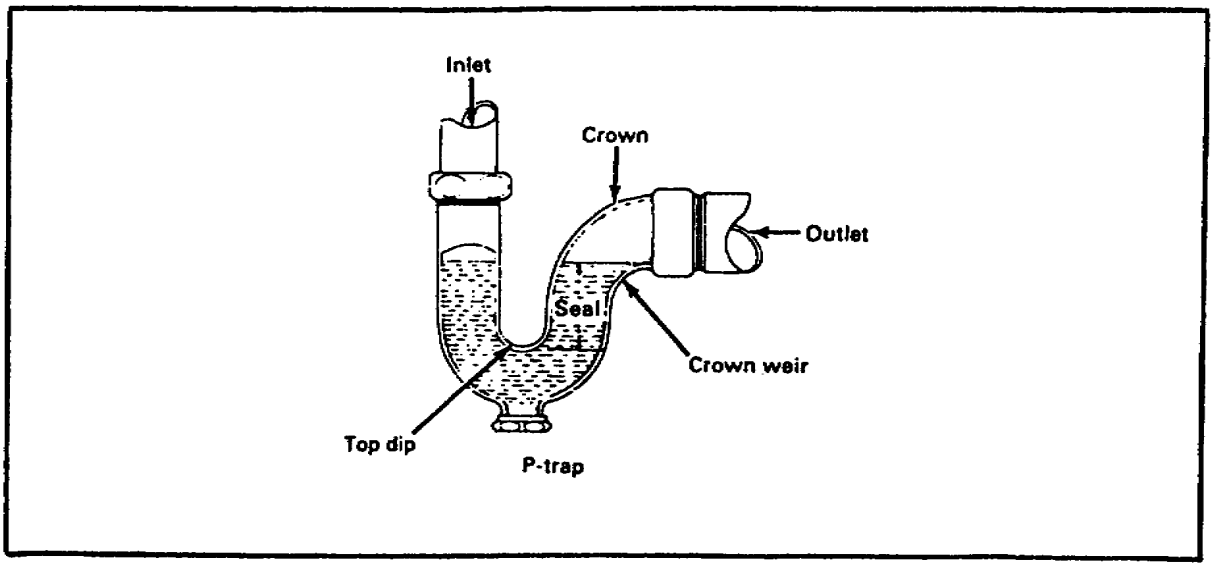

Cleanouts

A cleanout is a fitting with a removable plug that is placed in a roughed-in waste system to help clear any stoppage in waste drain lines. Cleanouts are placed at the connection between the building sewer line and drain line, at the base of a vertical stack, and at all places where pipe direction changes 90 degrees.

Cleanout for a building sewer line. This cleanout can be just outside or inside the building. It must be 2 or more inches above the ground or the building floor.

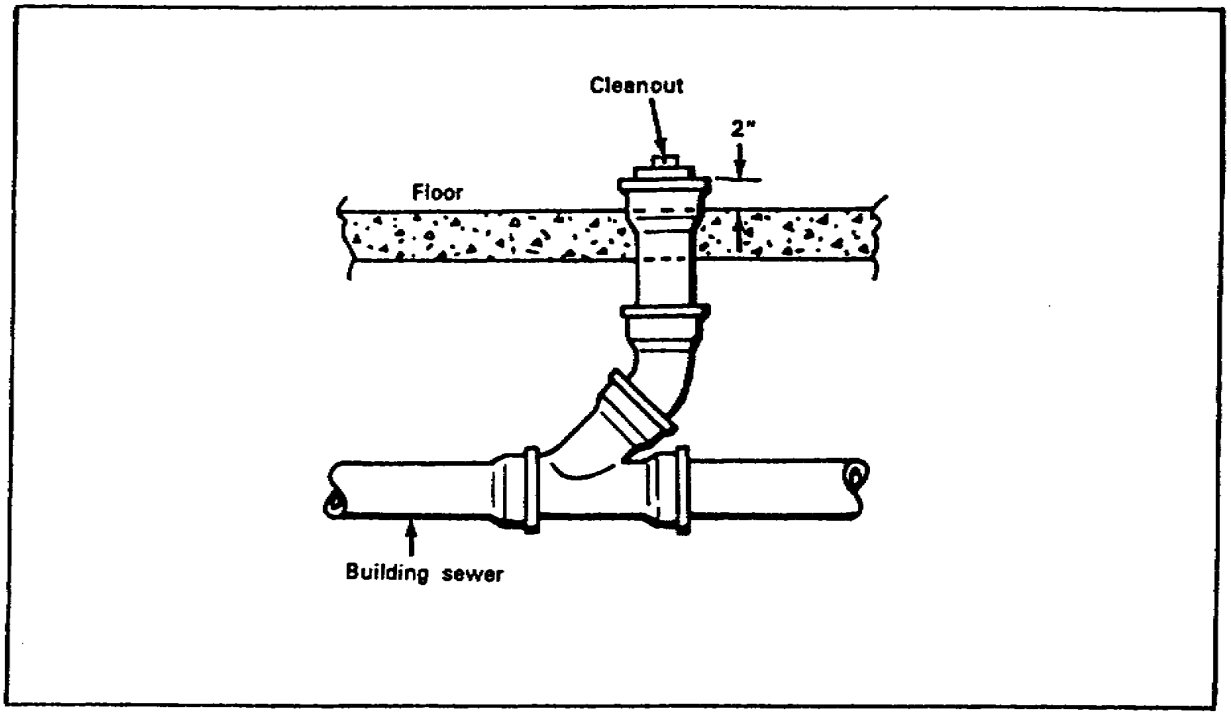

Cleanout at the base of vertical stack. This cleanout must be 6 inches or more above the floor.

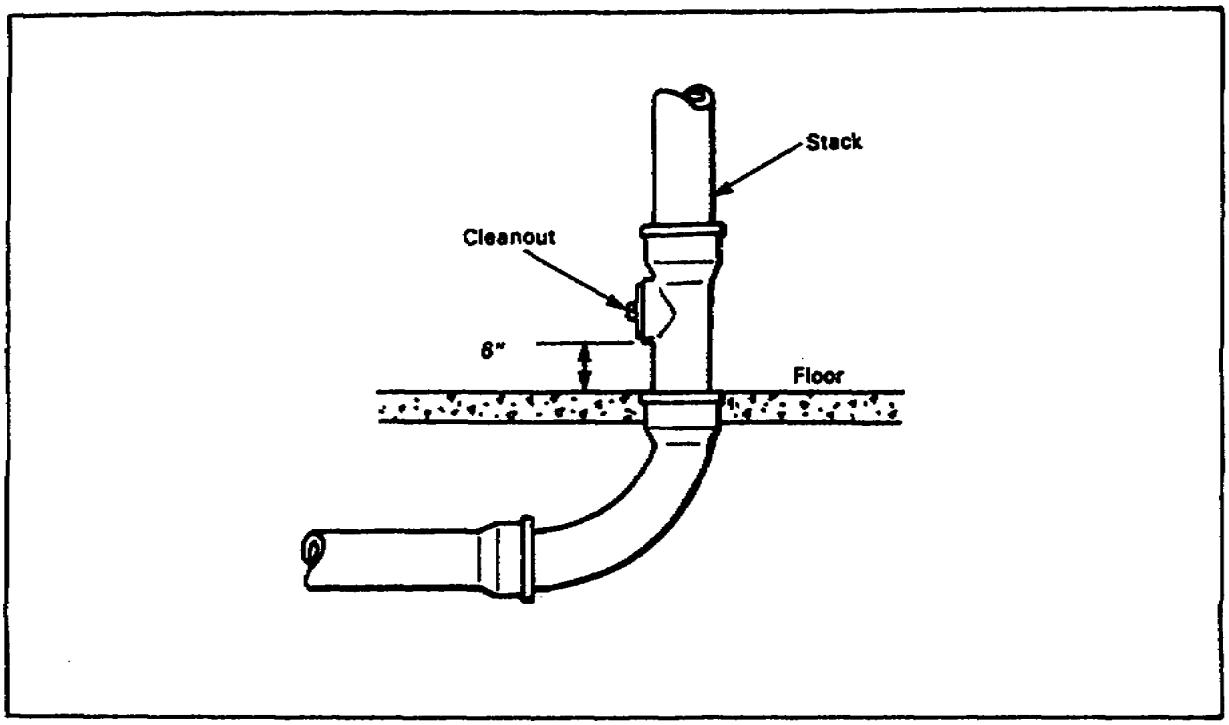

Cleanout for a 90-degree change-of-pipe direction. This cleanout is installed to clear any possible stoppage caused by the 90-degree turn in the line.

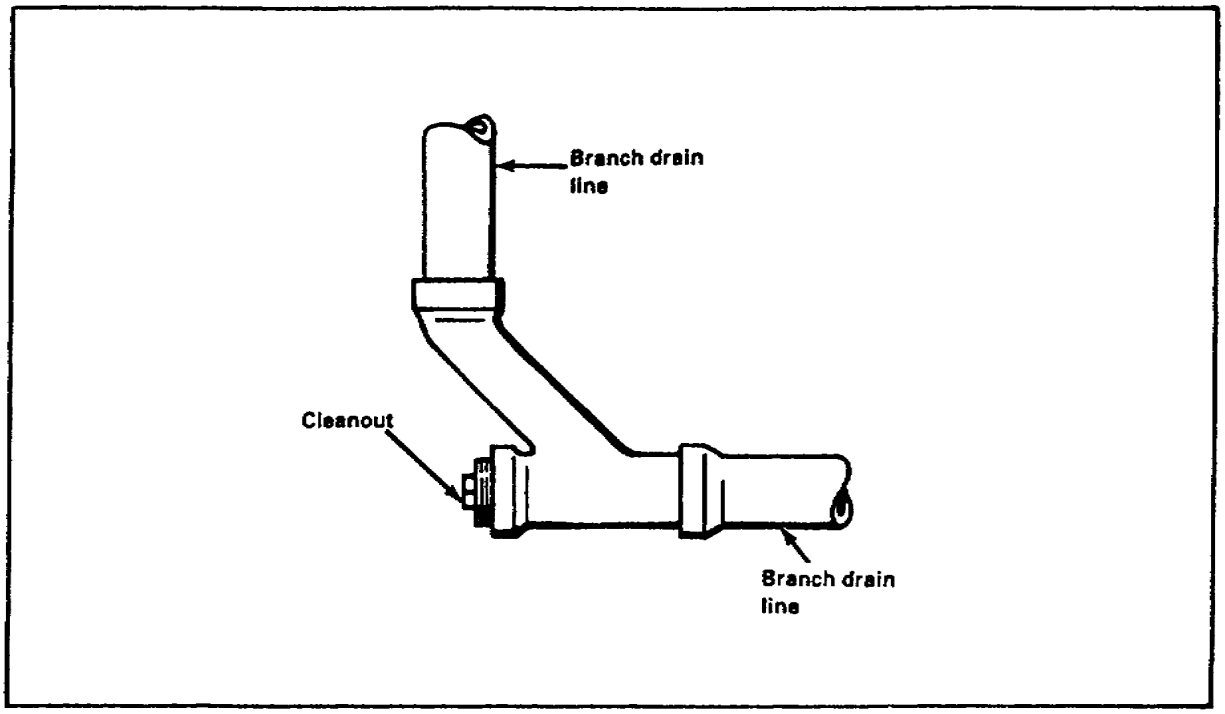

Lesson 2
Learning Event 3
SELF-CHECK EXERCISE

1. Match the type of vent with its description.
   Circuit vent
   Unit vent
   Wet vent

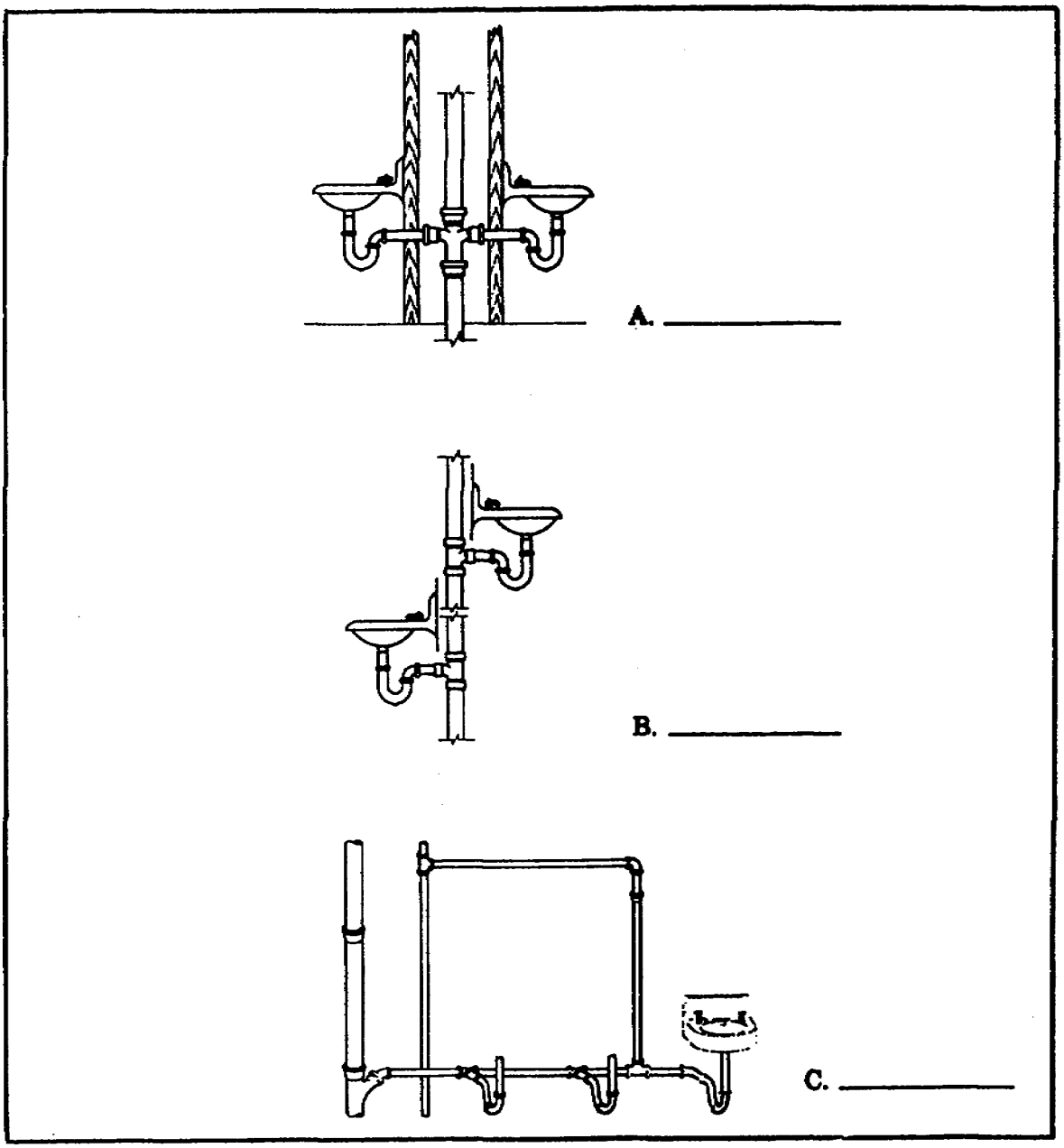

2. The water seal in a P-trap between the crown weir and the top dip is-
   A. 1 inch
   B. 2 inches
   C. 3 inches
   D. 4 inches

3. The cleanout for a building sewer line must be more than-
   A. 6 inches above floor
   B. 4 inches above floor
   C. 3 inches above floor
   D. 2 inches above floor

4. The cleanout at the base of a stack in a building must be-
   A. 2 inches above floor
   B. 4 inches above floor
   C. 6 inches above floor
   D. 8 inches above floor

5. A cleanout is installed when a pipe run changes direction by-
   A. 22½ degrees
   B. 33 1/3 degrees
   C. 42 degrees
   D. 90 degrees

SELF-CHECK EXERCISE SOLUTIONS

1. *A. Unit vent*
   B. Wet vent
   C. Circuit vent
2. *B*
3. *D*
4. *C*
5. *D*

If your responses are the same, GREAT. Continue on with the lesson. If not, go back and review the material.

Learning Event 4:
INSTALLING PIPING MATERIAL

Roughed-in waste system piping and fittings are installed between and through the building framework. Installation is done before the exposed wall studs and floor joists are covered. Installation at this time makes it easier to rough in pipe runs.

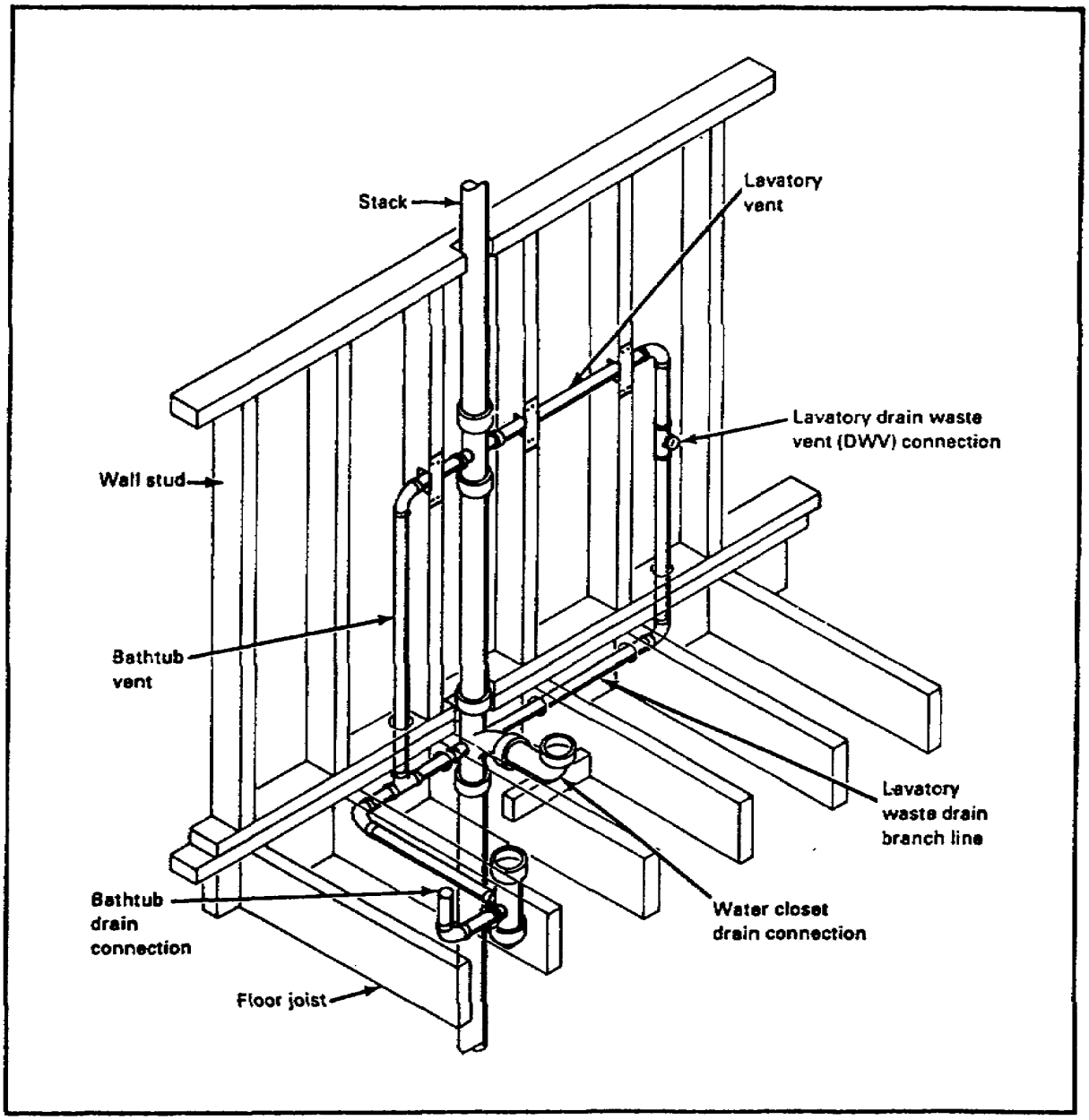

Installing Pipe Runs through Floor Joists

Cutting joists. Use the following steps:

Use a handsaw to cut a notch in the joist. The notch can be cut at the top or bottom of the joist. The width of the notch should be slightly larger than the pipe's outside diameter. The depth of the notch cannot be larger than one quarter of the joist depth.

Example: Joist depth = 8 inches
¼ of 8 = 2
Proper notch depth = 2 inches

Use a sharp wood chisel to cut away any wood between the saw cuts.

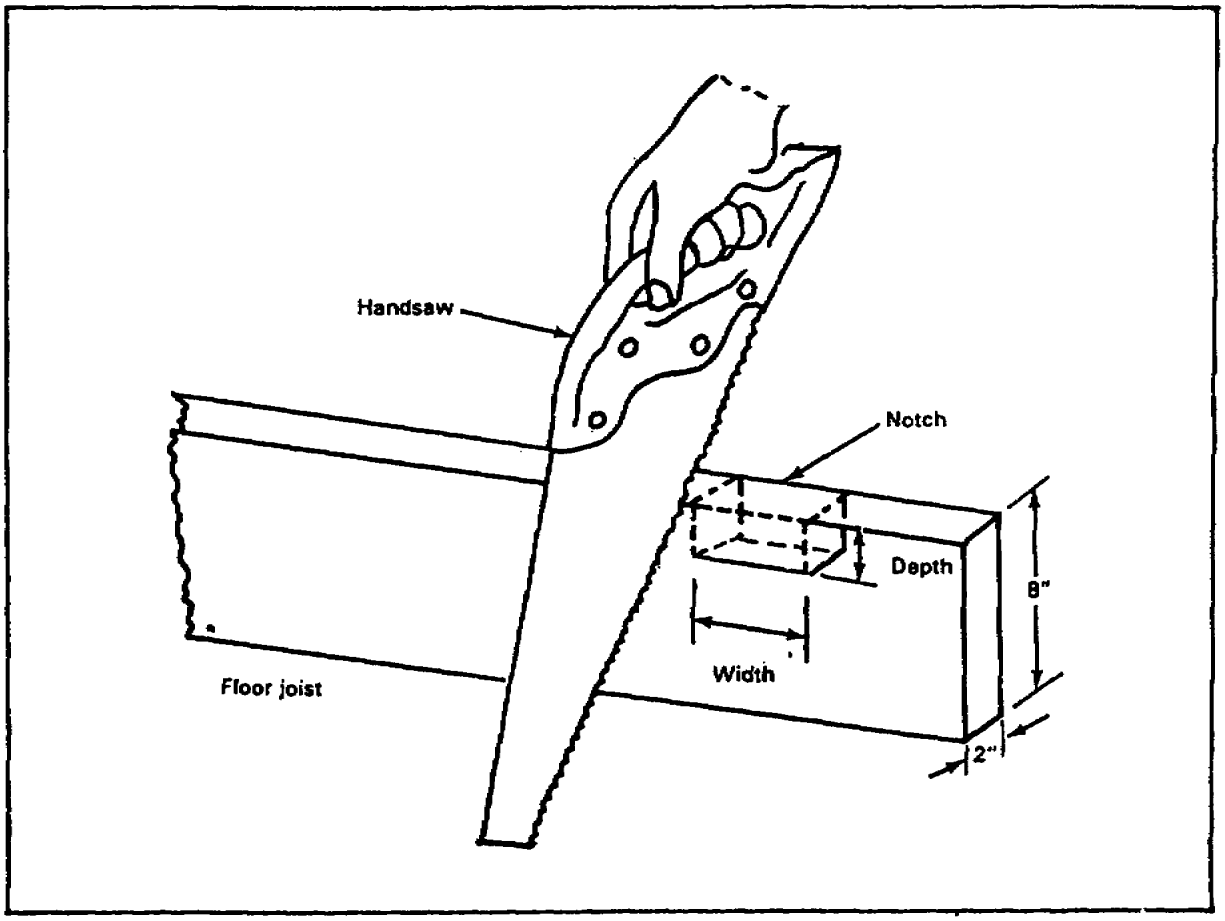

Bracing joists. A joist with a notch cut on top is braced with a 2- by 4-inch board on each side. The boards are nailed in pace and centered under the notch. A joist with a notch cut in the bottom is braced with a steel plate centered on the notch.

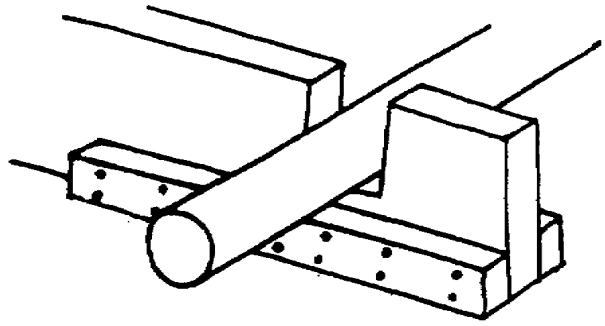

Notch at top

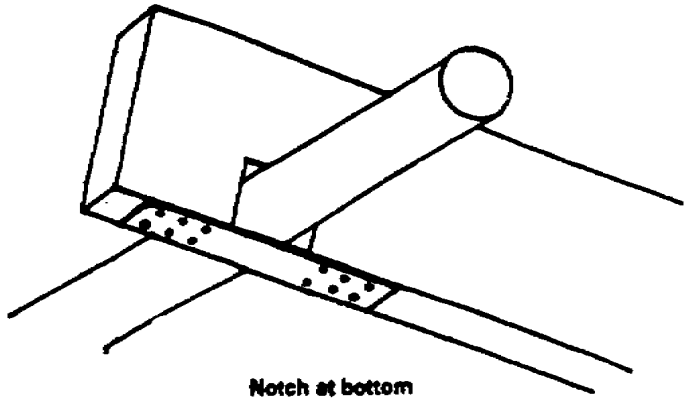

Notch at bottom

Cutting a joist for a water closet bend. Use the following steps:

Before cutting, make sure there is enough room to install and support a closet bend.

Completely cut out and remove a section of the joist.

Using boards of the same size, called headers, reinforce the joist. Use two headers on each side of the cut.

Install the closet bend.

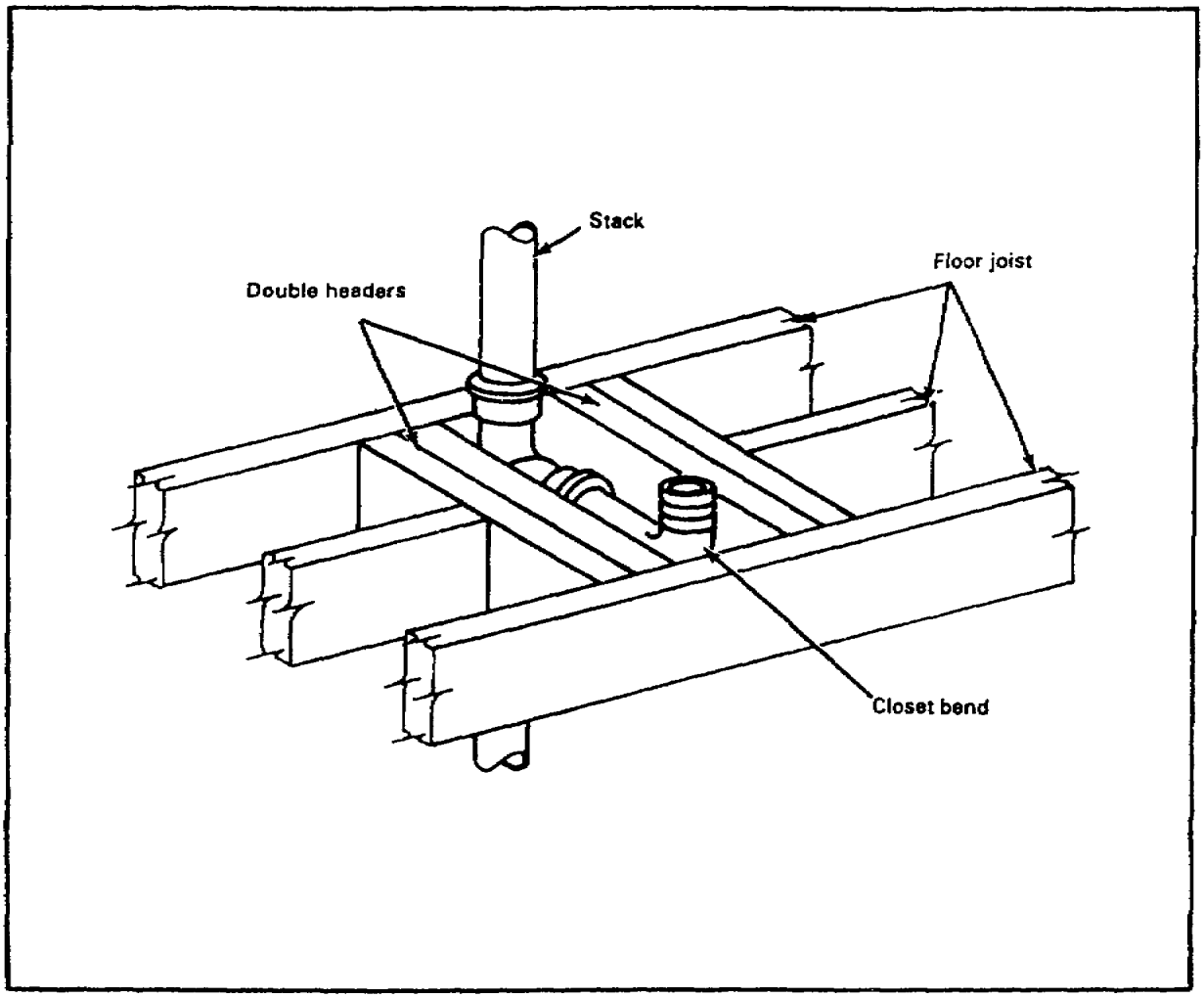

Installing Pipe Runs Through Wall Studs

Cutting wall studs. Always measure before cutting. Use the following steps:

The notch can be cut from the top or bottom half of the stud. A notch cut from the top cannot be greater than ½ of the depth of the stud. A notch cut from the bottom cannot be greater than 1/3 of the depth of the stud.

Make sure the notch can take the pipe size to be installed.

Cut the notch with a handsaw.

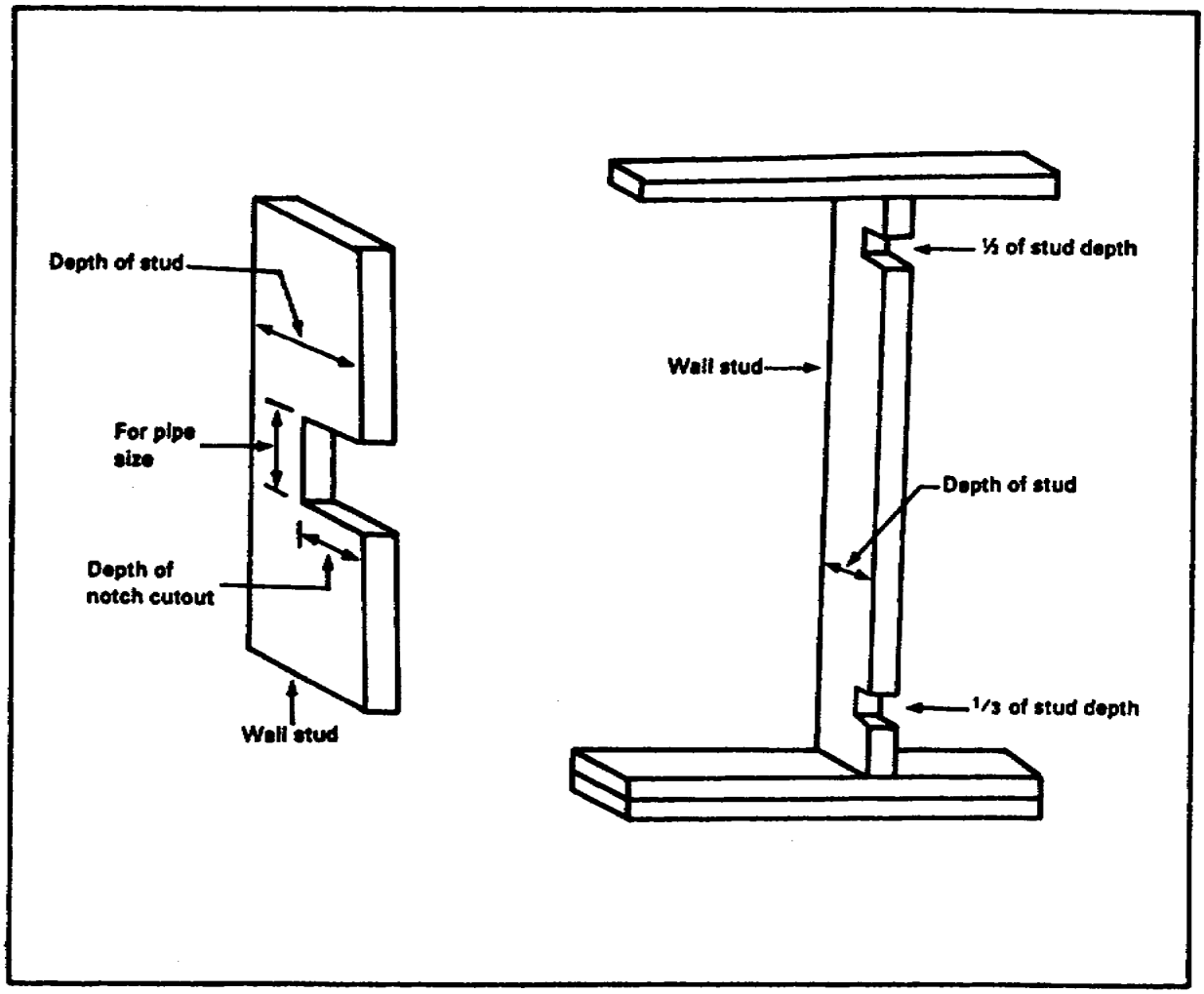

Bracing wall studs. Studs with a notch cut at the top or bottom are braced with steel plates over the center of the notch.

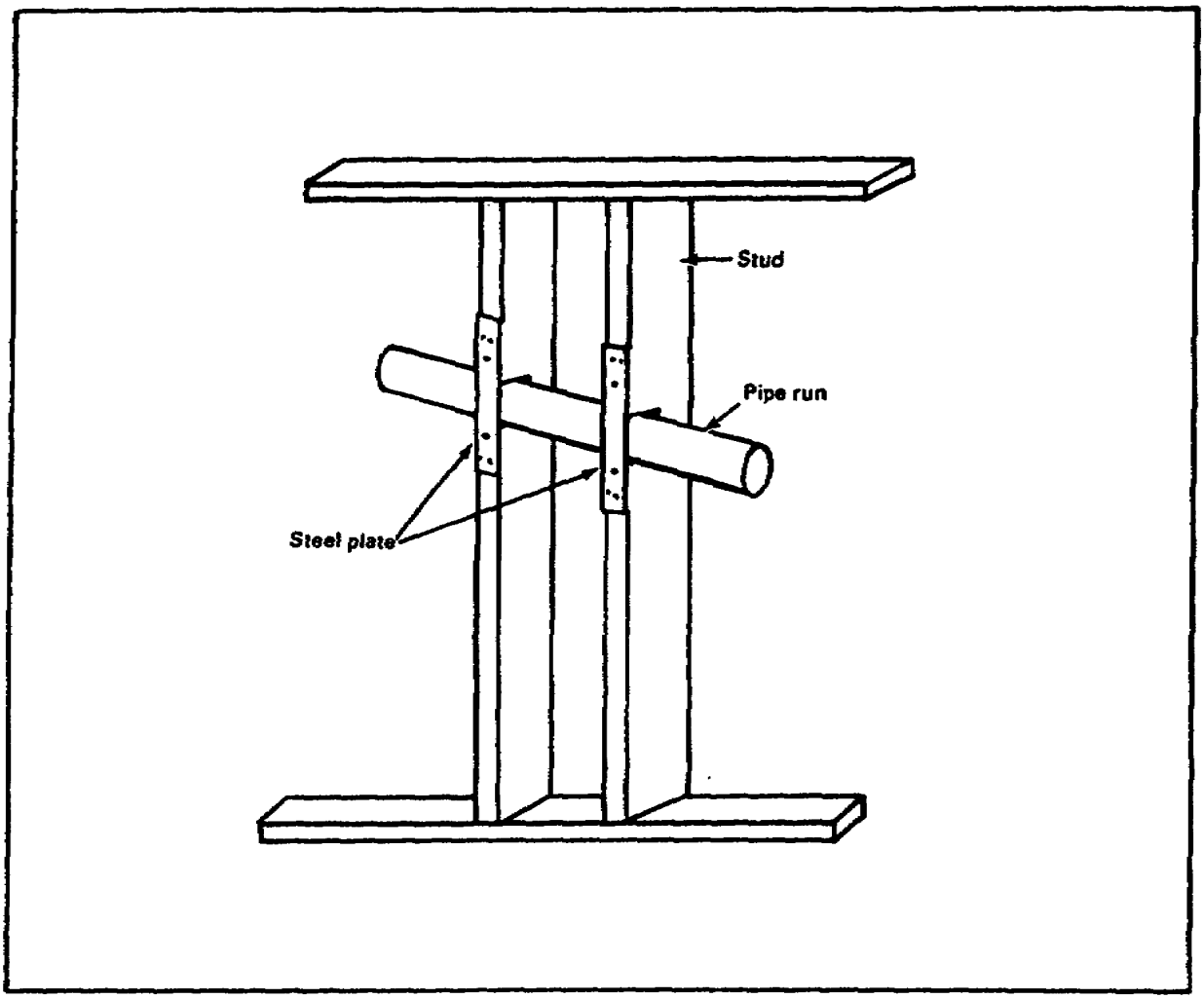

Lesson 2
Learning Event 4
SELF-CHECK EXERCISE

1. Identify each lettered item in the waste system.
   A._____
   B._____
   C._____
   D._____
   E._____
   F._____

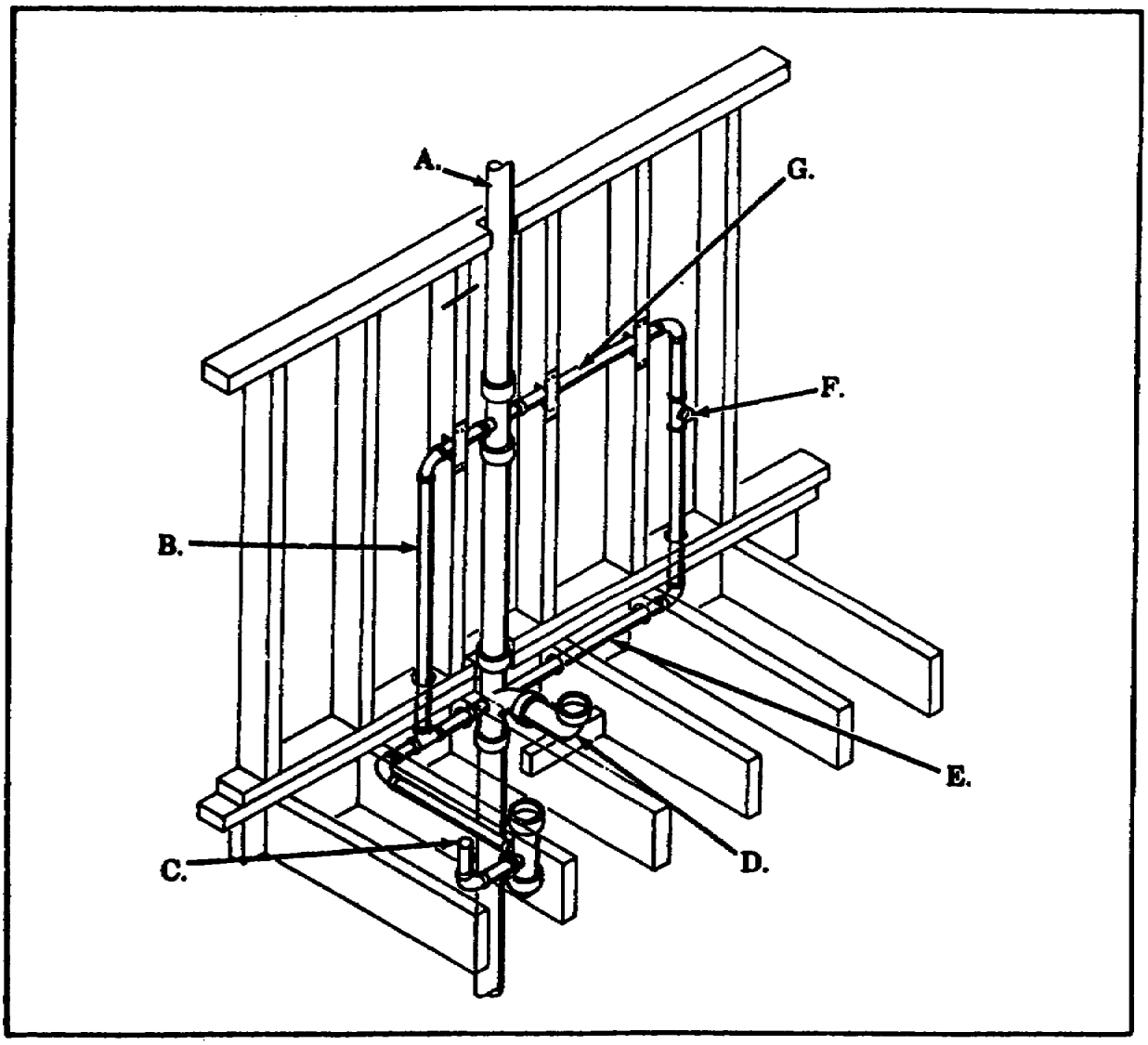

2. What is the maximum depth of a notch that can be cut in the top of a floor joist?
   A. 1/3 of joist depth
   B. ¼ of joist depth
   C. ½ of joist depth
   D. 5/8 of joist depth

3. What is the maximum depth of a notch that can be cut in the bottom of a floor joist?
   A. 1/3 of joist depth
   B. ¼ of joist depth
   C. ½ of joist depth
   D. 5/8 of joist depth

4. What is the right way to reinforce the floor joists for installing a closet bend?
Circle A or B.
   A.
   B.

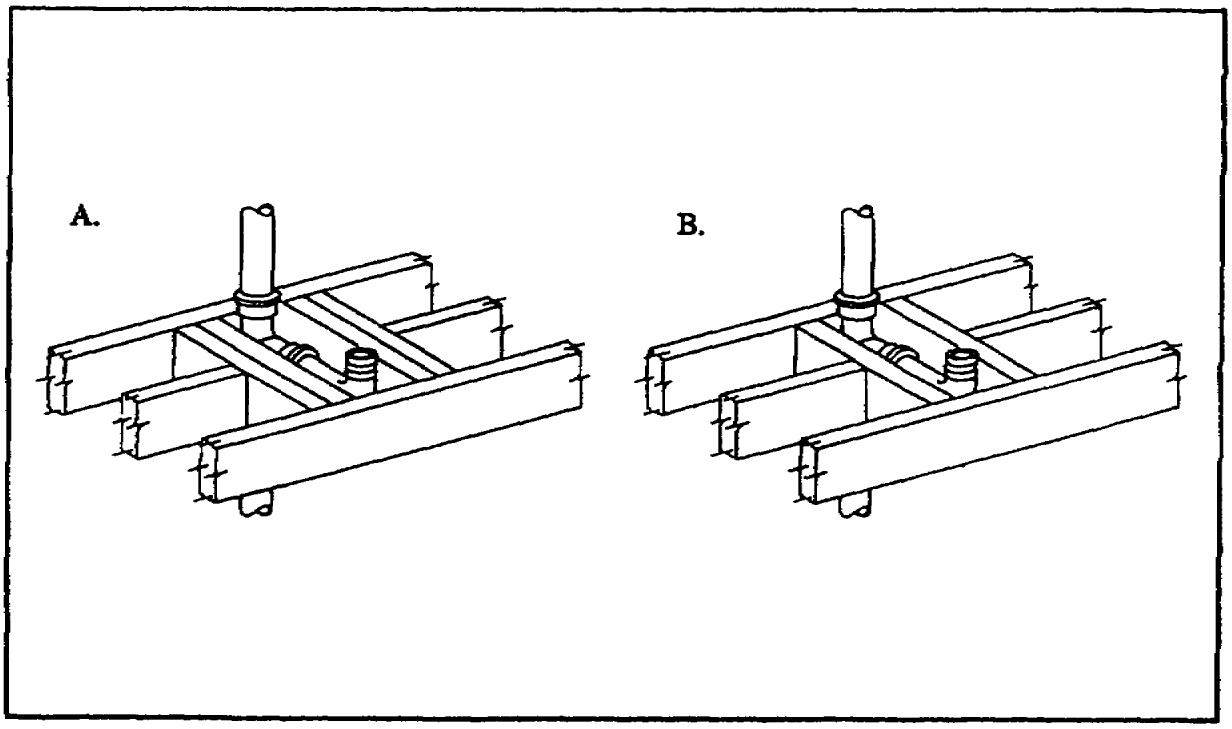

5. What is the maximum depth of notch cutouts for A and B in the wall stud?
   A._____
   B._____

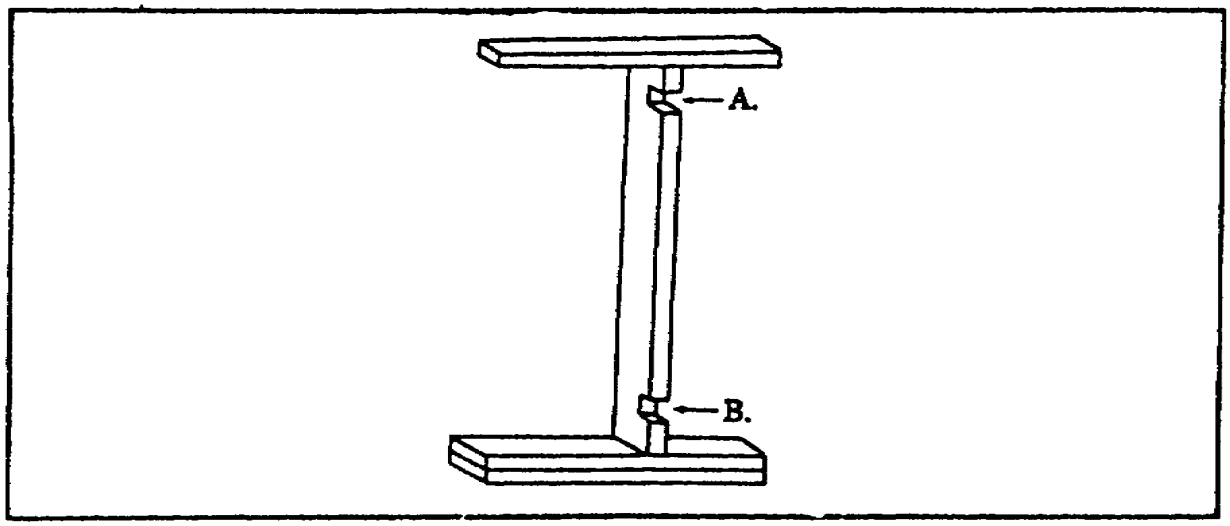

6. Which is the right way of reinforcing a notch cut at the top of the joist? Circle A or B.
   A.
   B.

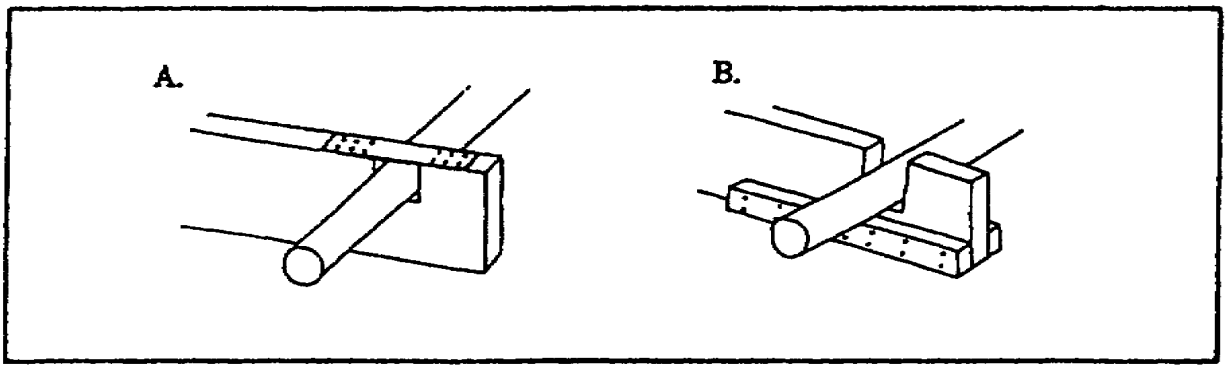

7. What type of material is used to reinforce the wall studs?
   A. Plywood stripes
   B. Wooded cleats
   C. Steel plates
   D. Metal fasteners

SELF-CHECK EXERCISE SOLUTIONS

l. *A. Stack*
B. Bathtub vent
C. Bathtub drain connection
D. Water closet bend
E. Lavatory drain line
F. Lavatory drain connection
G. Lavatory vent

2. *B. Maximum cut is ¼ of joist depth.*

3. *B. Maximum cut is ¼ of joist depth.*

4. *A*

5. *A. ½ of stud depth*
B. 1/3 of stud depth

6. *B*

7. *C. Steelplates*

If your responses are the same, GREAT. Continue on with the lesson. If not, go back and review the material.

Learning Event 5:
SUPPORTING PIPELINE RUNS

All pipe runs, whether vertical or horizontal, must be supported in place. The pipe run's length, location, and joints will determine the kind of support to use and where to use it. The building material and type of pipe will also determine the kind of support to use.

Kinds of Pipe Hangers and Supports

The following illustration shows a sample of hangers and supports.

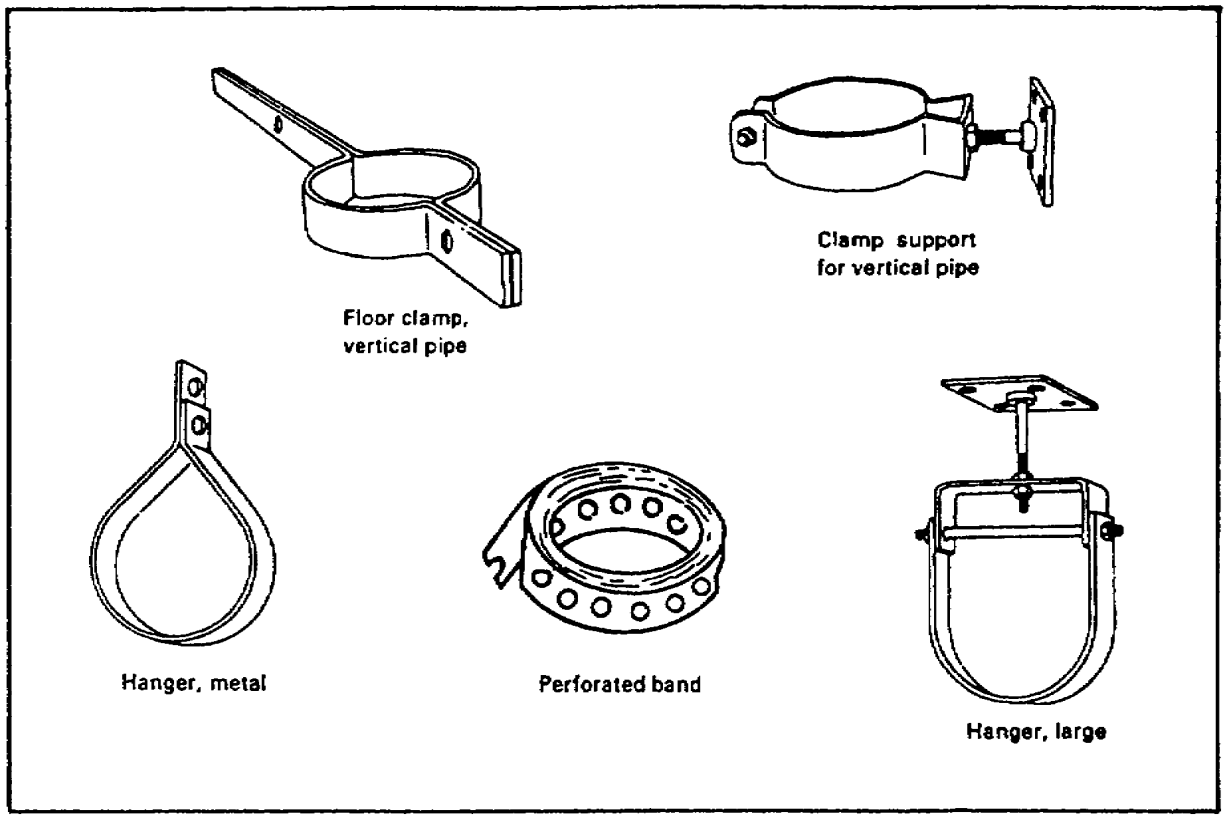

Methods of Supporting Vertical Pipe

Vertical pipe must be supported to keep it in a straight, vertical position. The method of support is determined by the location of the pipe run and joists.

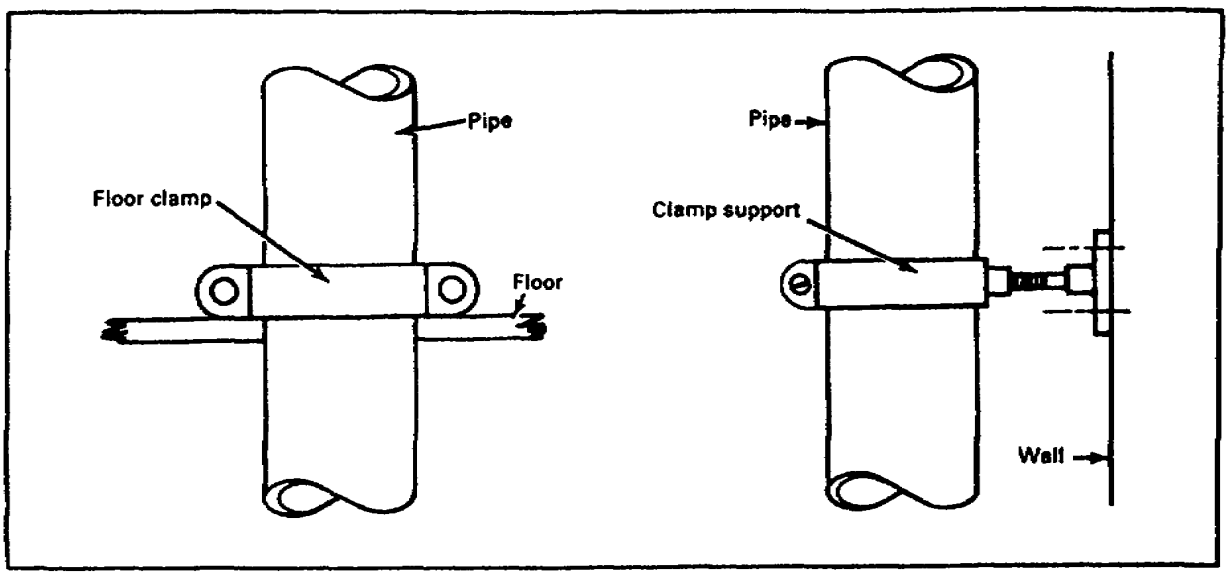

Methods of Supporting Horizontal Pipe

Horizontal pipes must be supported to keep them in line and prevent sagging. The method and location of support is determined by the type of pipe and location of the pipe runs.

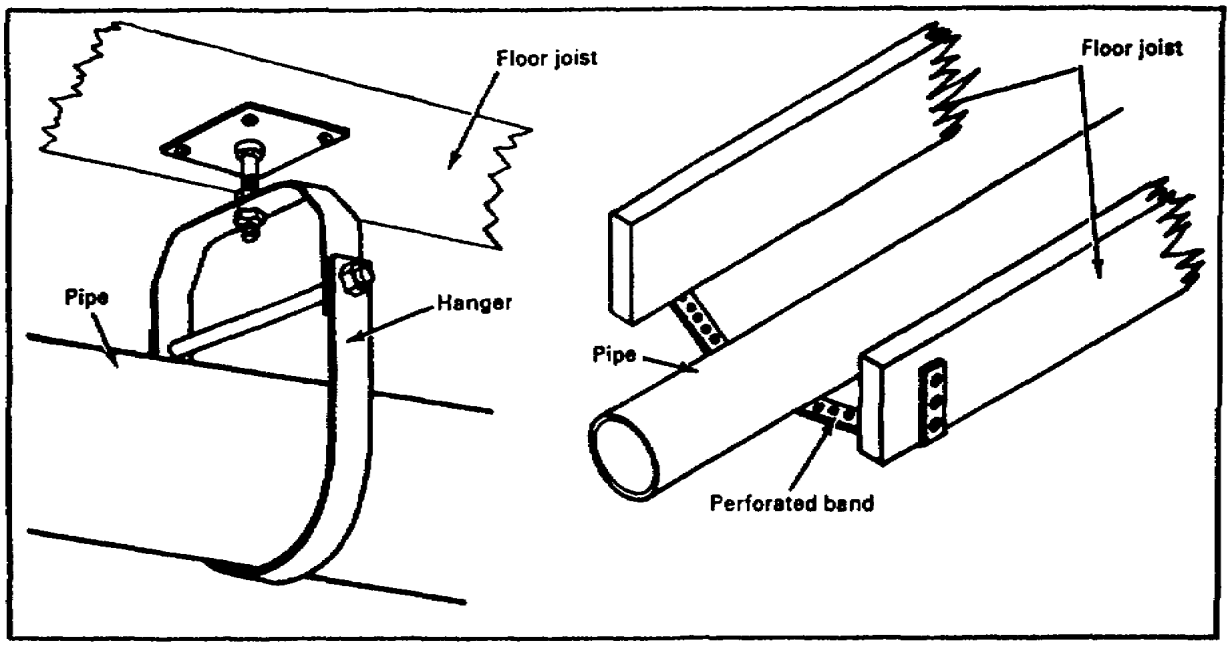

Lesson 2
Learning Event 5
SELF-CHECK EXERCISE

1. Match each item with its description.
   Hanger, large
   Clamp support for vertical pipe
   Perforated band
   Floor clamp for vertical pipe

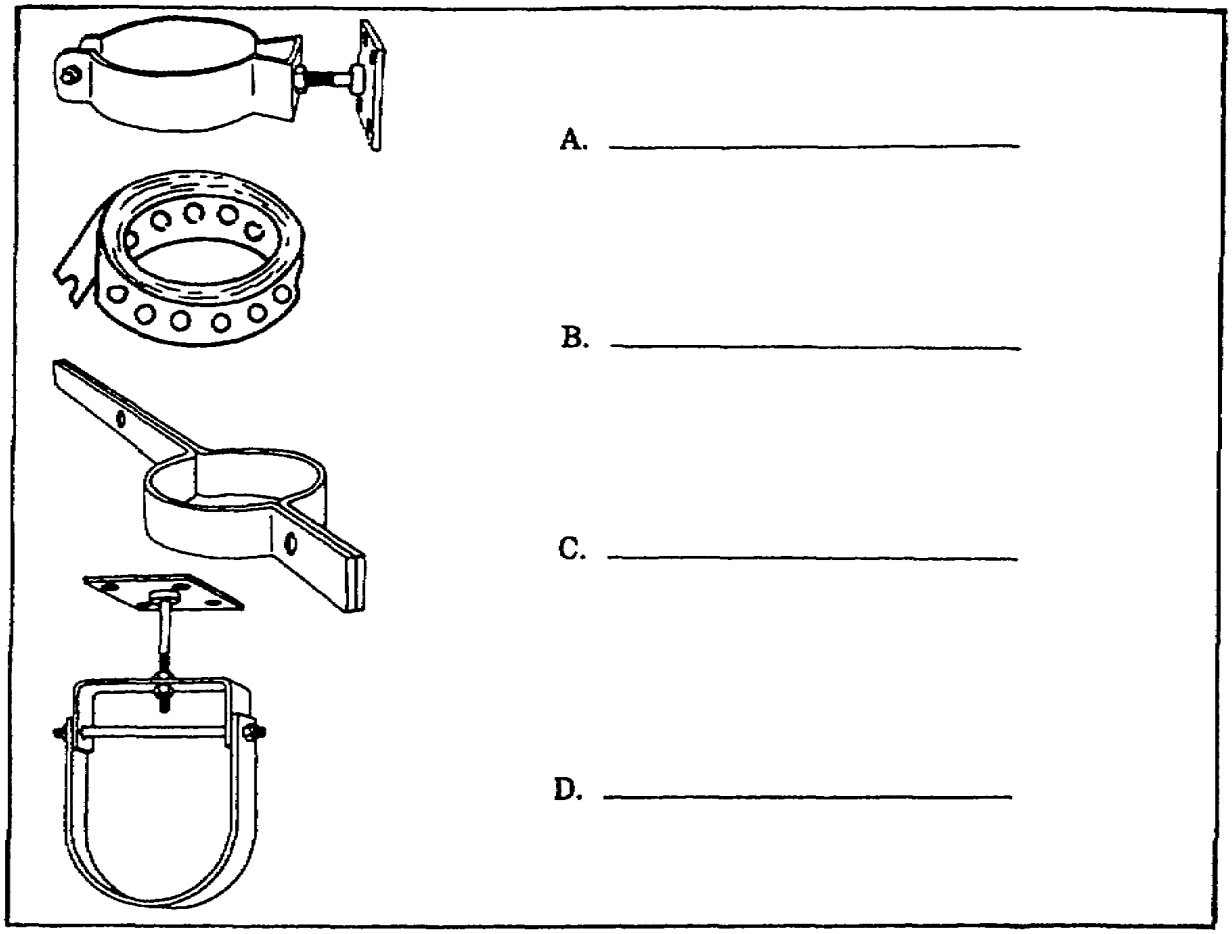

SELF-CHECK EXERCISE SOLUTIONS

1. A. Clamp support for vertical pipe
B. Perforated band
C. Floor clamp for vertical pipe
D. Hanger, large

If your responses are the same, GREAT. Continue on with the lesson. If not, go back and review the material.

Learning Event 6:
TESTING THE SYSTEM FOR LEAKS

Once the waste system rough-in is completed, test it for leaks. Repair any leaks found and retest the system. A water test and/or an air test can be used. Testing must be done before the walls are put up.

Using Plugs

Mechanical plugs. To test with mechanical plugs, place the rubber spreader into the opening to be plugged. Expand the rubber spreader by turning the wing nut and/or ratchet in a clockwise direction.

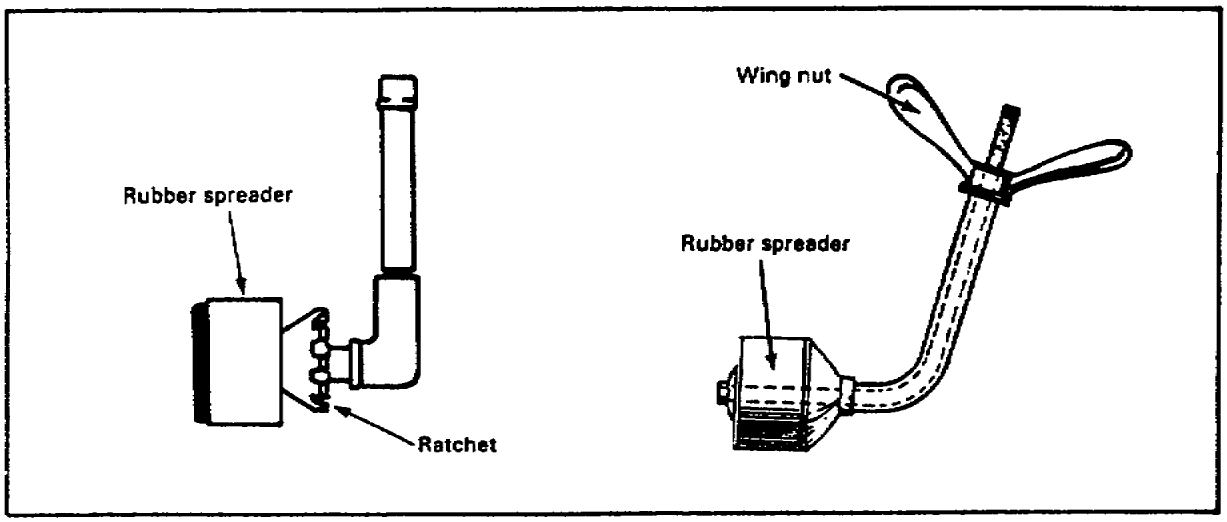

Inflatable air plugs. To test with inflatable air plugs, place the inflatable plug into the opening to be plugged. Inflate the plug with the hand-operated air pump.

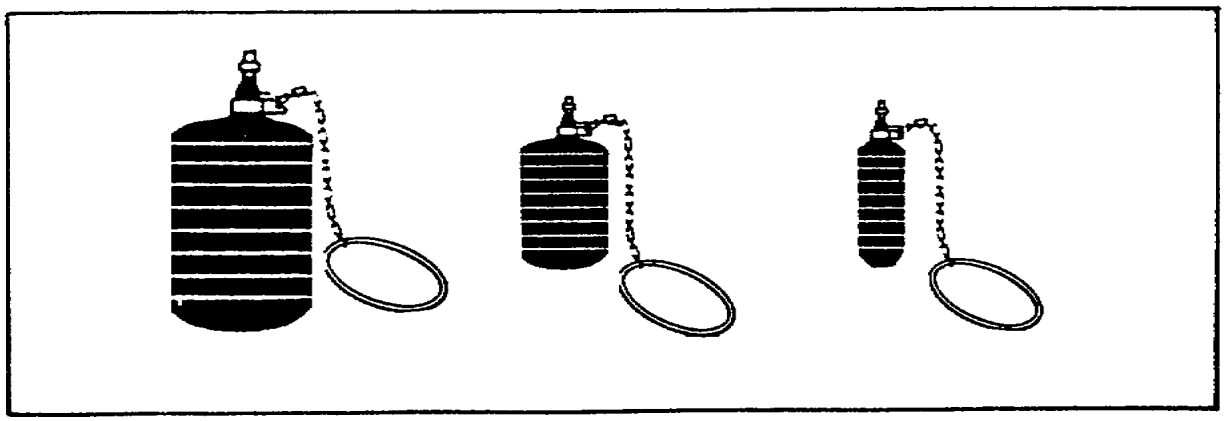

Performing a Water Test

A new system with oakum and lead joints must be filled with water at least 12 to 24 hours to allow the oakum in the joint to swell and form a water-tight seal. The system is then drained and tested. For all types of piping used in a waste system, use these steps to perform the test:

Seal off all openings, except the highest vent opening, with plugs. Threaded piping can be sealed off with threaded plugs or caps.

Fill the system with water through the highest vent opening and check for water leaks.

If the water level drops more than 4 inches in 30 minutes, check the system for leaks.

Remove the water from the system.

Repair any leaks.

Retest

Performing an Air Test

Use the following steps:

With plugs, seal off all openings except one for the test equipment and gage.

Force air through the system until the gage reads 5 pounds per square inch (psi).

Let the air pressure remain at 5 psi for 15 minutes.

Put a soapy solution on the joints to test for leaks.

Release the air.

Repair any leaks.

Retest.

Lesson 2
Learning Event 6
SELF-CHECK EXERCISE

1. List the two types of plugs used to test a rough-in waste system.

   _____

   _____

2. When performing a water test on a rough-in waste system, you must check for leaks after the water level has dropped how many inches in 30 minutes?
   A. 6
   B. 5
   C. 4
   D. 3

3. An air pressure of how many pounds per square inch (psi) must be maintained for 15 minutes during an air test in a rough-in waste system?
   A. 8
   B. 7
   C. 6
   D. 5

SELF-CHECK EXERCISE SOLUTIONS

1. *Mechanical*
   Inflatable
2. *C. If water level drops over 4 inches, check system for leaks.*
3. *D. Five psi is applied to system for 15 minutes. If psi drops, check for leaks.*

If your responses are the same, GREAT. Continue on with the review exercise. If not, go back and review the material.

Lesson 2
REVIEW EXERCISE

1. What materials are used to attach a sewer thimble to the main sewer line?
   A. Oakum and lead
   B. Oakum and portland cement
   C. Oakum and solder
   D. Oakum and solvent cement

2. What is the grade slope used to install all horizontal drain waste piping in a rough-in waste system?
   A. ¼ inch per pipe
   B. ¼ inch per yard
   C. ¼ inch per foot
   D. ¼ inch per joint

3. What types of stacks make up a main stack?
   A. Soil and waste
   B. Soil and vent
   C. Soil, waste, and vent

4. From the illustration below, what type of vent is used for each lavatory?
   A. Wet vent
   B. Unit vent
   C. Circuit vent
   D. Cross vent

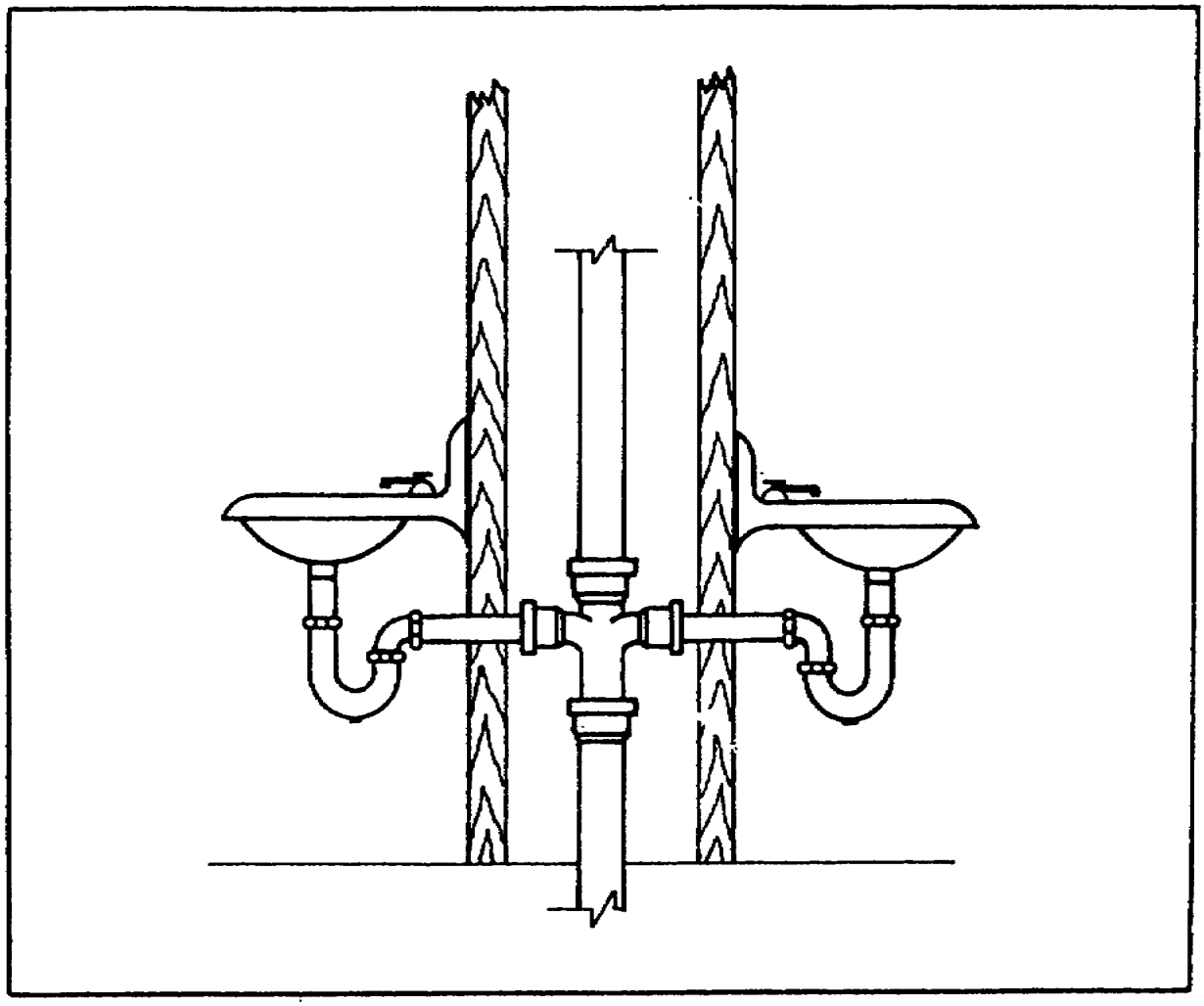

5. What is the correct trap seal for a P-trap between the crown weir and the top dip?
   A. 3 inches
   B. 2½ inches
   C. 2 inches
   D. 1½ inches

6. What is the minimum height required for a cleanout above the floor at the base of a stack?
   A. 2 inches
   B. 4 inches
   C. 6 inches
   D. 8 inches

7. When installing waste pipe runs, what is the maximum depth of a cut-out notch in a floor joist?
   A. 1/3 of joist depth
   B. ¼ of joist depth
   C. ½ of joist depth
   D. 5/8 of joist depth

8. When installing waste pipe runs, what is the maximum depth of a cut-out notch at the bottom half of a wall stud?
   A. 5/8 of stud depth
   B. ½ of stud depth
   C. ¼ of stud depth
   D. 1/3 of stud depth

9. How many minutes is water kept in a rough-in waste system during a water test?
   A. 15
   B. 20
   C. 25
   D. 30

10. How many minutes is air pressure of 5 psi kept in a rough-in waste system during an air test?
   A. 25
   B. 20
   C. 15
   D. 10

REVIEW EXERCISE SOLUTIONS

1. *B (Page 54)*
2. *C (Page 54)*
3. *C (Page 58)*
4. *B (Page 65)*
5. *C (Page 68)*
6. *C (Page 69)*
7. *B (Page 76)*
8. *D (Page 79)*
9. *D (Page 90)*
10. *C (Page 90)*

SUBCOURSE
EN5113

EDITION
5

US ARMY ENGINEER SCHOOL
PLUMBING FIXTURES
(PLUMBING IV)

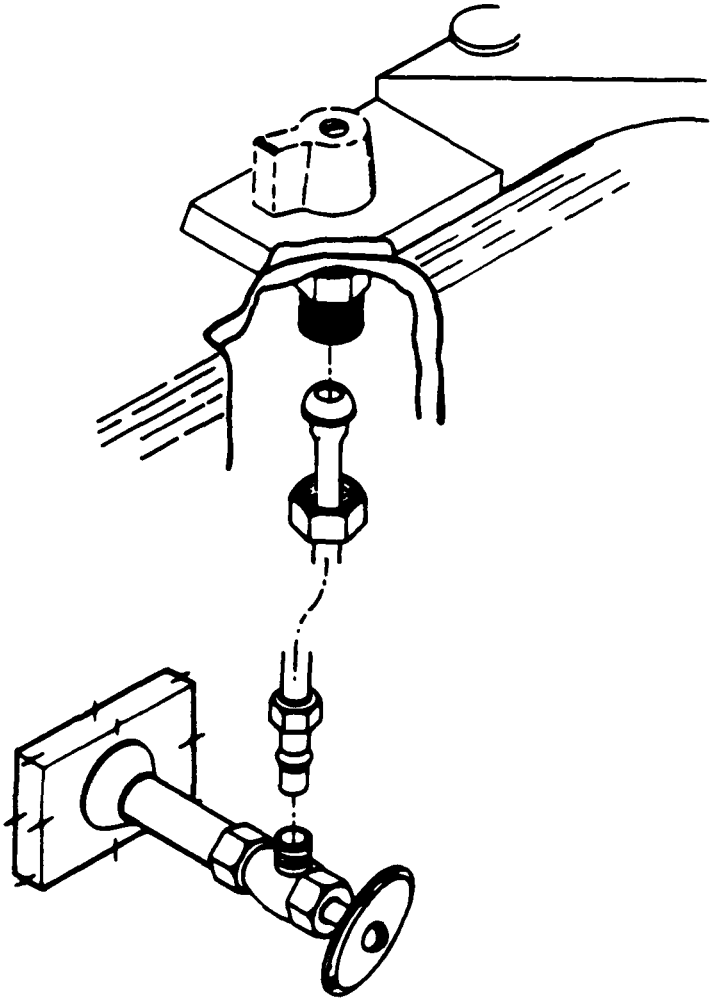

THE ARMY INSTITUTE FOR PROFESSIONAL DEVELOPMENT
ARMY CORRESPONDENCE COURSE PROGRAM

AIPD

READINESS/
PROFESSIONALISM
THRU
GROWTH

US ARMY PLUMBER
MOS 51K SKILL LEVELS 1 AND 2 COURSE

PLUMBING FIXTURES
(PLUMBING IV)

SUBCOURSE NO. EN5113

US Army Engineer School
Fort Leonard Wood, Missouri

Twelve Credit Hours

GENERAL

The plumbing fixtures subcourse, part of the Plumber MOS 51K Skill Levels 1 and 2 course, is designed to teach the skills and knowledge necessary for performing tasks related to installing plumbing fixtures such as lavatories and sinks, water closets with tanks, and urinals. The subcourse is presented in three lessons, each corresponding to a terminal objective as indicated below.

Lesson 1: INSTALLATION OF LAVATORIES AND SINKS

OBJECTIVE: Describe the procedures for installing lavatories and sinks.

TASK: Task No. 051-248-1008, Install lavatory and sink.

CONDITIONS: Given subcourse booklet EN5113 and an examination response sheet. You will work at your own pace and in your own selected environment with no supervision.

STANDARDS: Within approximately 4 hours, you should be able to study the lesson resources, answer the review exercises, and select the correct responses to each examination question. You must respond correctly to 70 percent of the examination questions in order to receive credit for the subcourse.

Lesson 2: INSTALLATION OF WATER CLOSETS

OBJECTIVE: Describe the procedures for installing water closets with tanks.

TASK: Task No. 051-248-1009, Install water closet with tank.

CONDITIONS: Given subcourse booklet EN 5113 and an examination response sheet. You will work at your own pace and in your own environment with no supervision.

STANDARDS: Within approximately 4 hours, you should be able to study the lesson resources, answer the review exercises, and select the correct response to each examination question. You must respond correctly to 70 percent of the examination questions in order to receive credit for the subcourse.

Lesson 3: INSTALLATION OF URINALS

OBJECTIVE: Describe the procedures for installing urinals.

TASK: Task No. 051-248-1010, Install urinals.

CONDITIONS: Given subcourse booklet EN5113 and an examination response sheet. You will work at your own pace and in your own environment with no supervision.

STANDARDS: Within approximately 4 hours, you should be able to study the lesson resources, answer the review exercises, and select the correct response to each examination question. You must respond correctly to 70 percent of the examination questions in order to receive credit for the subcourse.

TABLE OF CONTENTS

PAGE

ADMINISTRATIVE INSTRUCTIONS v
GRADING AND CERTIFICATION INSTRUCTIONS v
INTRODUCTION v

Lesson 1: INSTALLATION OF LAVATORIES AND SINKS 1
Learning Event 1: Identifying Lavatories and Sinks 2
Learning Event 2: Installing Wall-Hung Lavatories 5
Learning Event 3: Installing Faucets 10
Learning Event 4: Attaching Drain Outlets 12
Learning Event 5: Installing P-Traps 18
Learning Event 6: Installing Shutoff Angle Valves 20
Learning Event 7: Installing Flexible Tubing 26
Learning Event 8: Testing for Mechanical Operation and Leaks 29
Review Exercise 31
Review Exercise Solutions 36

Lesson 2: INSTALLATION OF WATER CLOSETS WITH FLUSHING DEVICES 37
Learning Event 1: Identifying Water Closets 38
Learning Event 2: Installing Water Closets 40
Learning Event 3: Attaching Flushing Devices 45
Learning Event 4: Installing Flushing Mechanisms 50
Learning Event 5: Installing Flushometers 56
Learning Event 6: Installing Water Service 59
Learning Event 7: Adjusting Flushing Mechanisms 61
Learning Event 8: Installing the Seats 64
Review Exercise 66
Review Exercise Solutions 71

Lesson 3: INSTALLATION OF URINALS 72
Learning Event 1: Identifying Urinals 73
Learning Event 2: Installing Wall-Hung Urinals 77
Learning Event 3: Attaching Drain Outlets 79
Learning Event 4: Connecting P-Traps to Urinals 81
Learning Event 5: Installing Flushometers 84
Review Exercise 88
Review Exercise Solutions 90

STUDENT INQUIRY SHEET
(Administrative) ..... Following Examination
STUDENT INQUIRY SHEET
(Subcourse Content) ..... Following Examination

***** IMPORTANT NOTICE*****

THE PASSING SCORE FOR ALL ACCP MATERIAL IS NOW 70%.

PLEASE DISREGARD ALL REFERENCES TO THE 75% REQUIREMENT.

INTRODUCTION

Plumbing fixtures are receptacles for personal sanitation that discharge waste disposal into the main sanitary waste system of a building. Fixtures are manufactured in vitreous china, enameled cast iron, stainless steel, fiberglass, or plastic. These materials are durable, corrosion-resistant and nonabsorbent. All fixtures come from the manufacturer with rough-in instruction on how to install the item. Fixtures such as lavatories, sinks, water closets, and urinals are installed after the finished building walls and floors are completed. Once installed, all fixtures are tested for mechanical operation and leaks.

Lesson 1
INSTALLATION OF LAVATORIES AND SINKS

OBJECTIVE
At the end of this lesson, you will be able to describe the procedures used to install a lavatory and sink.

TASK
Task No. 051-248-1008, Install lavatory and sink.

CONDITIONS
You will have subcourse booklet EN5113 and an examination response sheet. You will work at your own pace and in your own selected environment with no supervision.

STANDARDS
Within approximately 4 hours, you should be able to study the lesson resources, answer the review exercises, and select the correct response to each examination question. You must respond correctly to 70 percent of the examination questions in order to receive credit for this subcourse.

CREDIT HOURS
4

REFERENCES
FM 5-51K
TM 5-551K

Lesson 1
INSTALLATION OF LAVATORIES AND SINKS

Learning Event 1:
IDENTIFYING LAVATORIES AND SINKS

A lavatory/sink is a fixture that is supplied with both hot and cold water. Its waste disposal drains into the building's waste system. Lavatories/ sinks come in many shapes and sizes. They can be made of vitreous china, enameled cast iron, and stainless steel (see Figures 1 and 2).

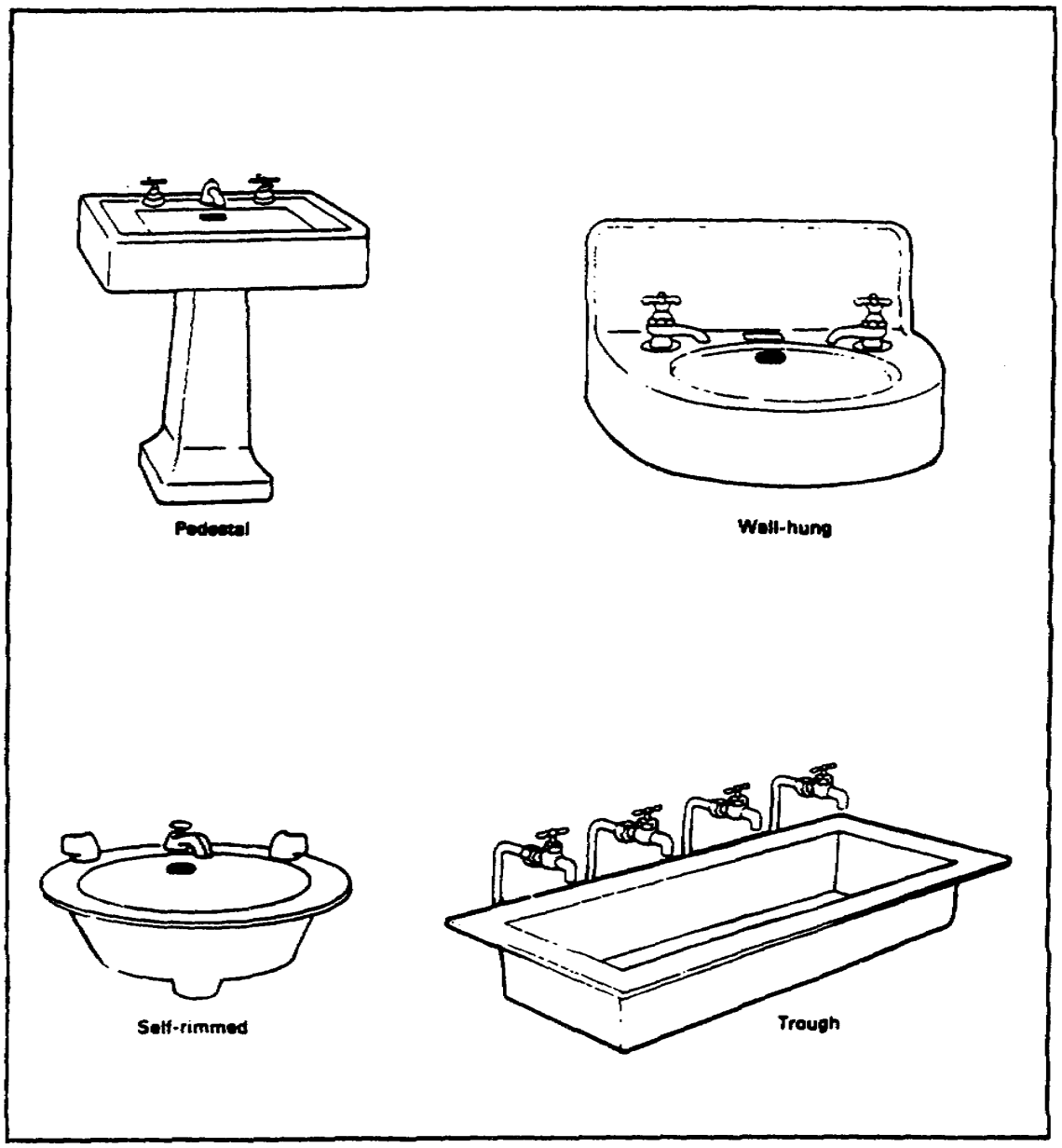

FIGURE 1. LAVATORIES

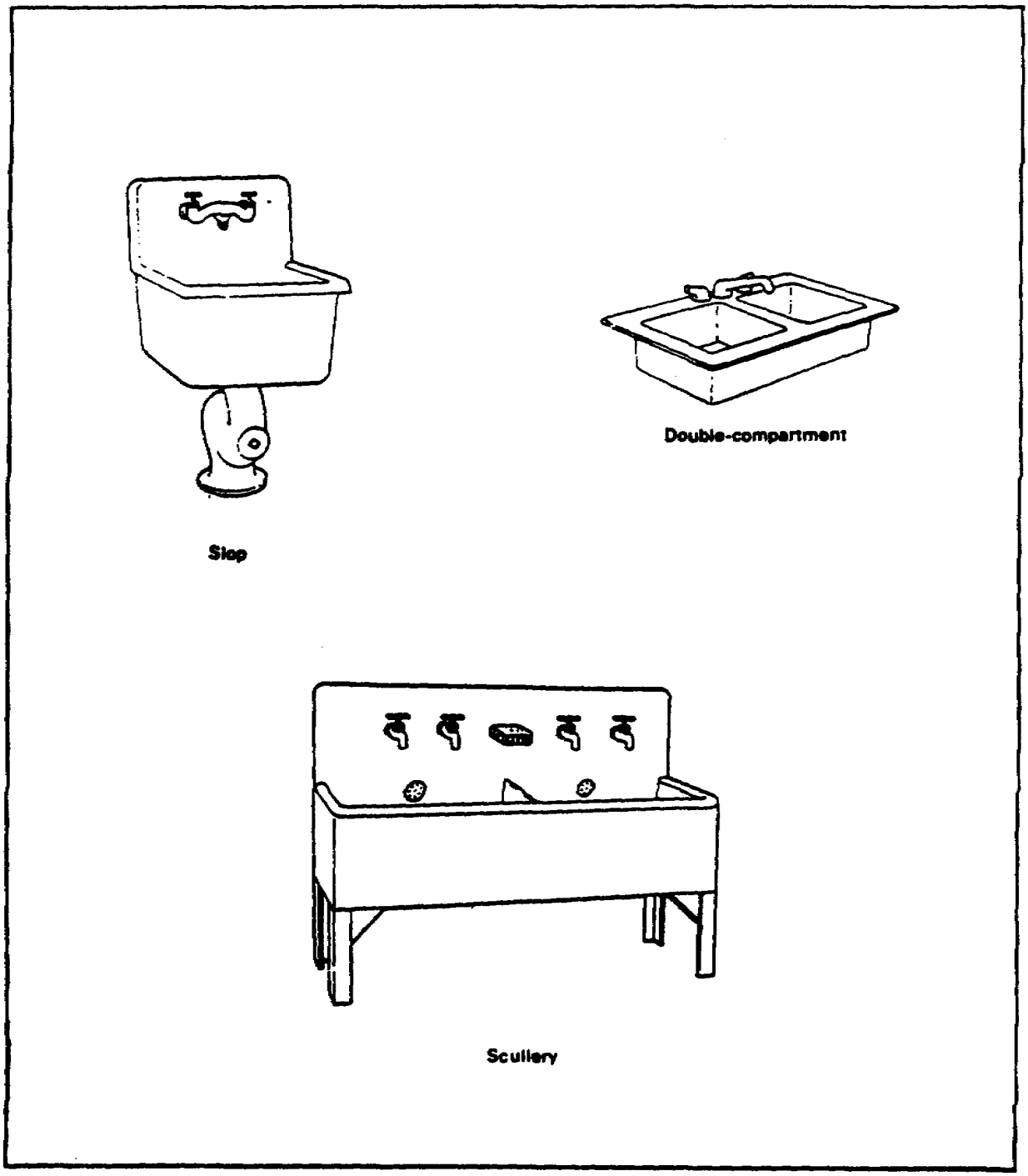

FIGURE 2. SINKS

Learning Event 1
SELF-CHECK EXERCISE

Match each lavatory or sink with its description.

A. Lavatory, trough
B. Sink, scullery
C. Lavatory, wall-hung
D. Sink, slop

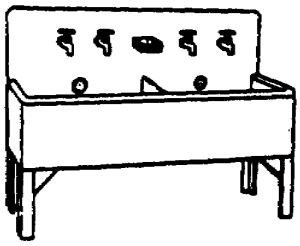

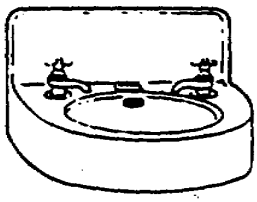

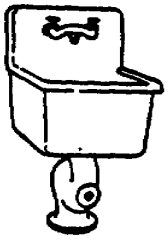

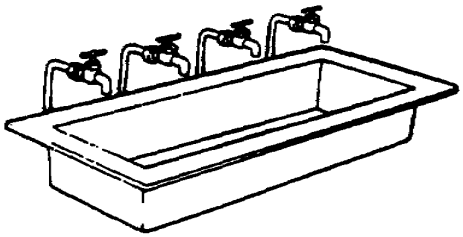

SELF-CHECK EXERCISE SOLUTIONS

D. Sink, slop
C. Lavatory, wall-hung
B. Sink, scullery
A. Lavatory, trough

Learning Event 2:
INSTALLING WALL-HUNG LAVATORIES

To install a wall-hung lavatory, you need a mounting board placed between the studs, a mounting bracket to support the lavatory, and the manufacturer's rough-in specifications for the lavatory. You must set the lavatory in place on the mounting bracket. To obtain the measurements for installing the mounting board, the mounting bracket, and the lavatory, always look over the manufacturer's rough-in specifications (see Figure 3).
NOTE: If manufacturer's specifications are not available, you should check the set of construction drawings and/or check with your supervisor.

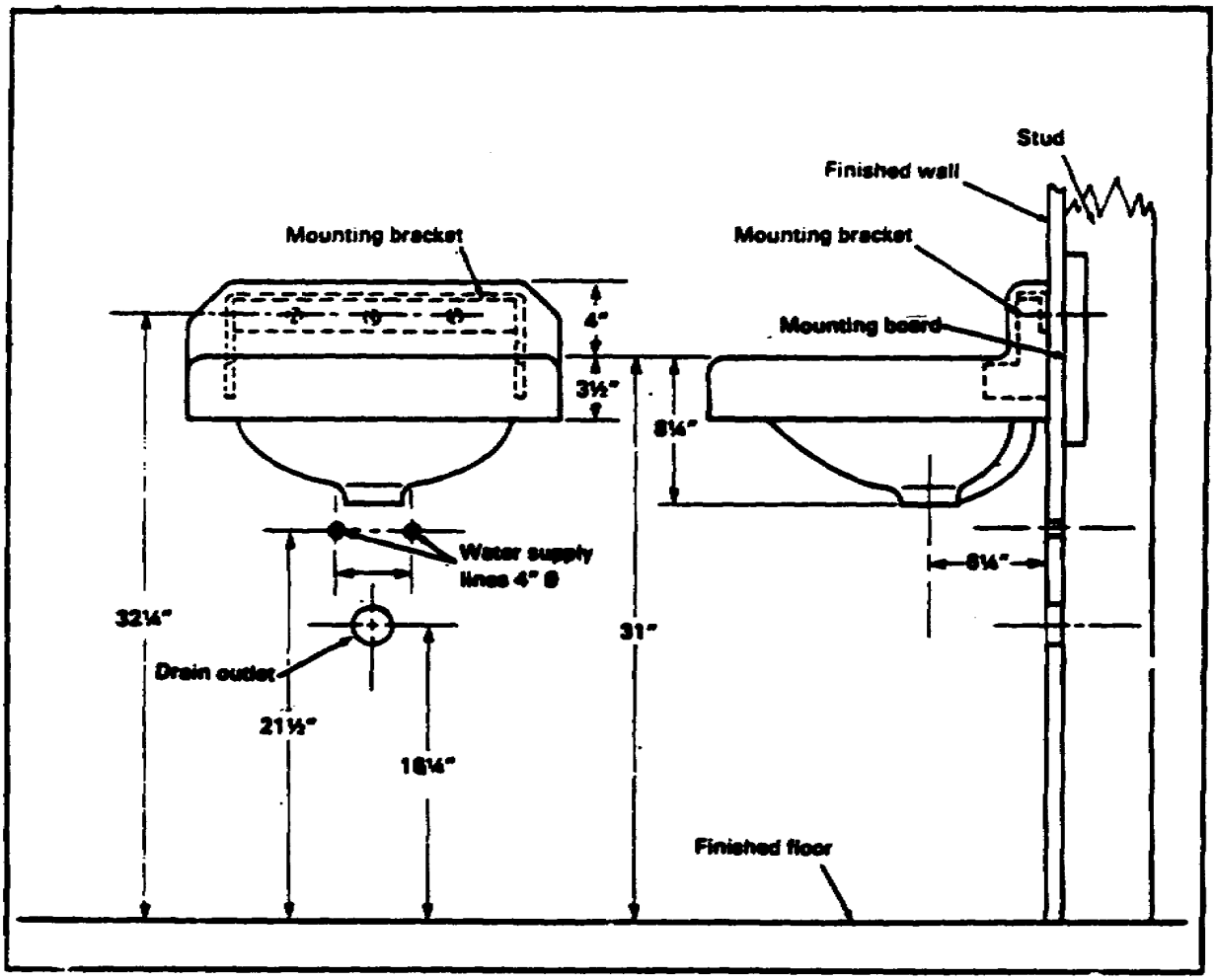

FIGURE 3. MANUFACTURER'S SPECIFICATIONS

Installing the mounting board. Use the following steps to install the mounting board (see Figure 4).

If the wall is finished, cut out a section so that the two adjoining wall studs can be measured and marked for notches. If the wall is not finished, measure and mark the location of each notch to be cut into each wall stud (see Figure 4-A).

Cut out the notch on each wall stud to the same width and depth as the mounting board to be installed (see Figure 4-B).

Place and nail mounting board to wall studs. Be sure that the board is even with the edge of the wall studs facing you (see Figure 4-C).

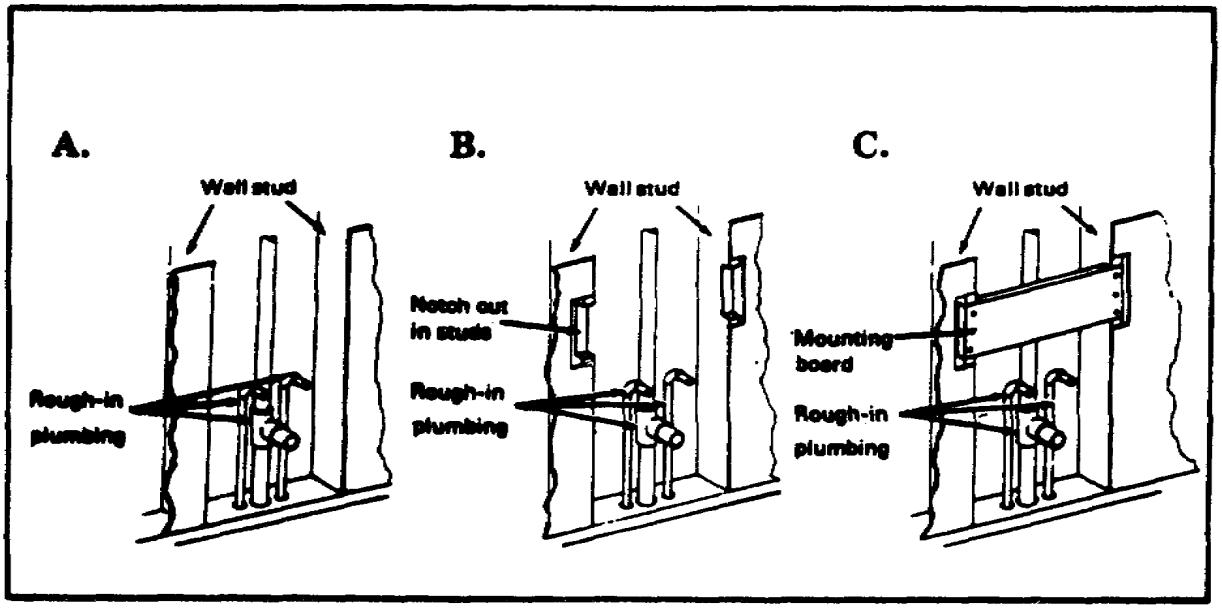

FIGURE 4. METHOD OF INSTALLING MOUNTING BOARD

NOTES:

1. If wall studs are 2 inches by 4 inches, use 1-inch lumber for mounting board. If wall studs are 2 inches by 6 inches, use 2-inch lumber for mounting board.

2. If a finished wall section was cut out, it must be replaced after the mounting board is installed.

Installing the mounting bracket. Use the lavatory's rough-in dimensions to install the mounting bracket. Make sure that the bracket is placed at the right height from floor, and level the bracket with a carpenter's level. Attach the bracket with screw (see Figure 5).

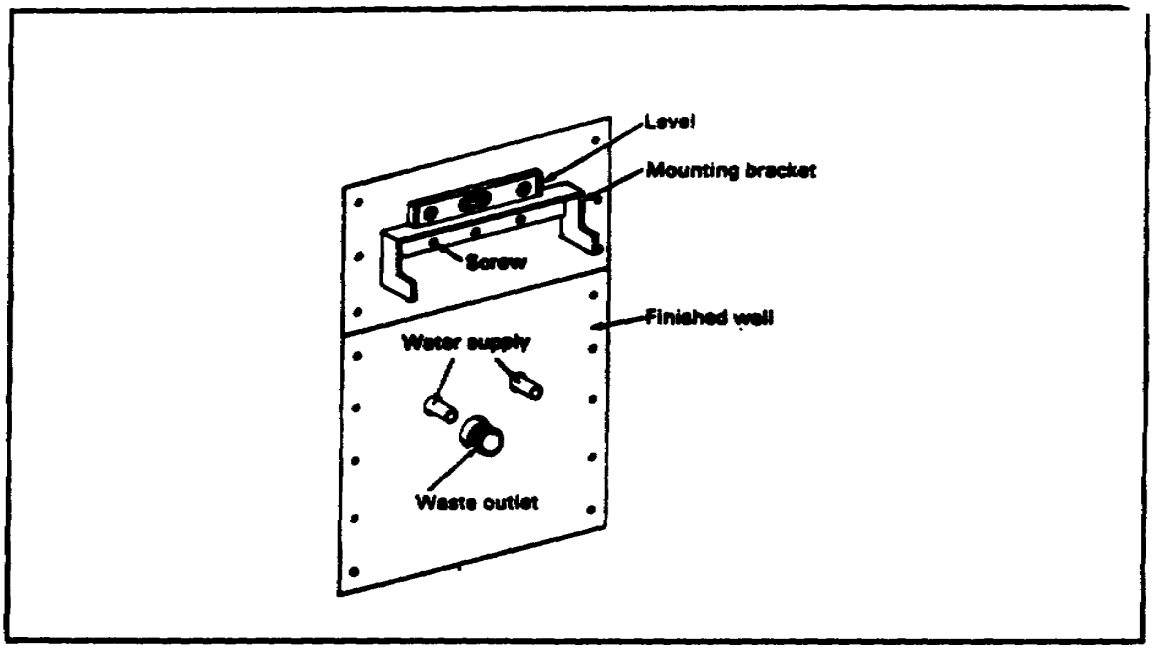

FIGURE 5. INSTALLATION OF MOUNTING BRACKET

Setting the lavatory on the mounting bracket. Place the lavatory on the mounting bracket by pushing it down gently but firmly as far as it can go. Then check the level of the lavatory with a carpenter's level. Make sure it is level (see Figure 6).

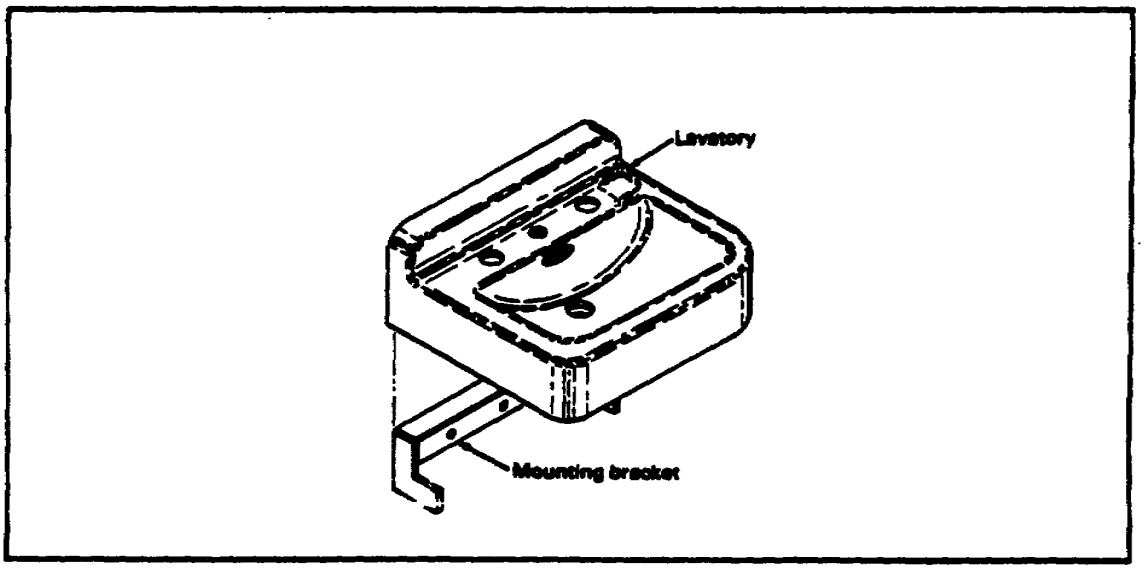

FIGURE 6. PLACEMENT OF LAVATORY MOUNTING BRACKET

Learning Event 2
SELF-CHECK EXERCISE

1. Match the steps required to install the mounting board.

A. If the wall is finished, cut out a section so that the two adjoining wall studs can be measured and marked for notches. If the wall is not finished, measure and mark the location of each notch to be cut into each wall stud.

B. Cut out the notch on each wall stud to the same width and depth the mounting board to be installed.

C. Place and nail mounting board to wall studs. Make sure that the mounting board is even with the edge of the wall studs facing you.

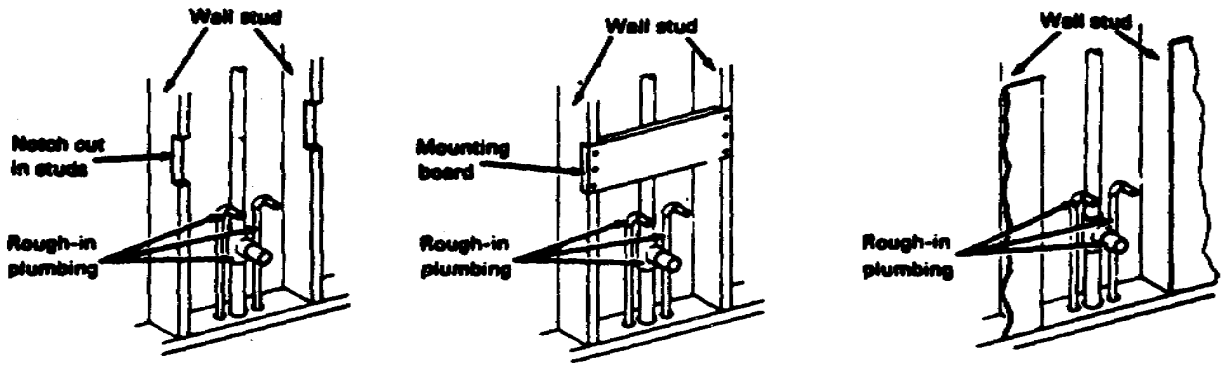

_____ _____ _____

Solutions for this exercise are on page 9.

Fill in the blanks with your responses.

2. The notch cut into each wall stud has to be the same_____and _____ as the mount board to be installed.

3. The mounting board is _____with the edge of the _____facing you.

4. The mounting bracket must be placed at the right _____from the floor.

5. The mounting bracket must be set in a _____position.

6. The lavatory is pushed down on the mounting bracket_____but _____.

7. Check the lavatory on the mounting bracket to ensure that it is _____.

SELF-CHECK EXERCISE SOLUTIONS

1. B
   C
   A
2. Depth, width
3. Even, wall studs
4. Height
5. Level
6. Gently, firmly
7. Level

Learning Event 3:
INSTALLING FAUCETS

There are many types and styles of faucets. When attaching a single or combination faucet to a lavatory or sink, follow the manufacturer's instructions. All faucets are attached to a lavatory/sink in basically the same manner. Use the following steps to install a single or combination faucet (see Figure 7):

Apply plumber's putty to the bottom of the faucet.

Set the faucet in the holes provided for the faucets.

From under the lavatory/sink, slide a washer on each threaded end, and screw the locknuts on until they are hand-tight.

Using a basin wrench, tighten the locknuts.

Wipe off all excess plumber's putty around the base of the faucet.

NOTE: If the combination faucet comes with a gasket, plumber's putty is not applied to the base.

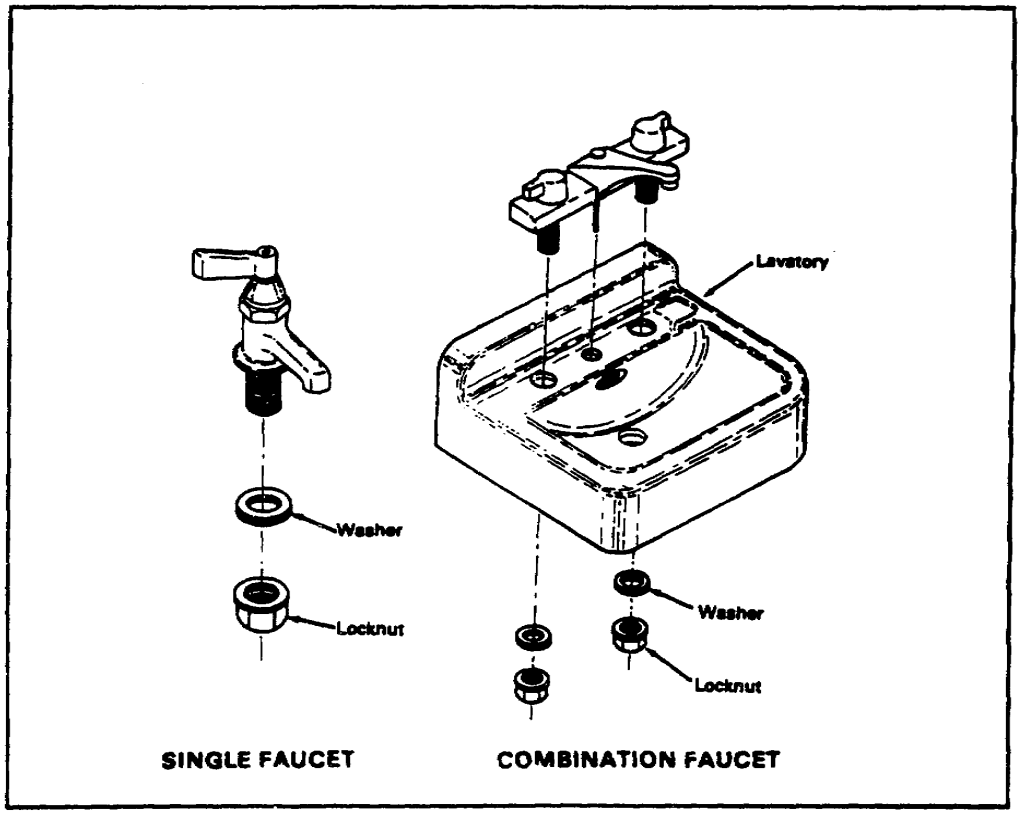

FIGURE 7. INSTALLATIONS OF FAUCETS

Learning Event 3
SELF-CHECK EXERCISE

1. List the correct order of installing a combination faucet on a lavatory.
   A. Screw locknut on faucet threads hand-tight, and tighten with a basin wrench.
   B. Apply plumber's putty to bottom of faucet, and set faucet on lavatory.
   C. Slide washer over threaded ends of faucet.

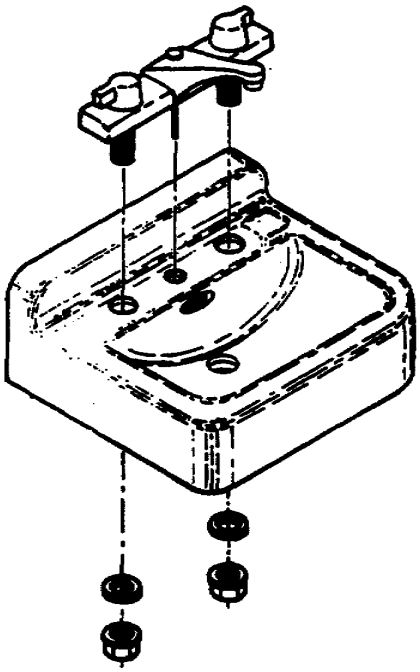

_____ _____ _____

Fill in the blank with your response.
2. When the combination faucet comes with a _____, plumber's putty is not applied on the bottom of the faucet.

SELF-CHECK EXERCISE SOLUTIONS

1. B
   C
   A
2. Gasket

Learning Event 4:
ATTACHING DRAIN OUTLETS

A drain outlet attachment to a lavatory/sink is the first step in installing the fixture's draining system. The drain outlet hookup is a combination of parts that are assembled to the lavatory/sink. The two types of attachments are the pullout (PO) plug type and the popup type.

Pull-out (type of outlet attachment. Use the following steps for PO type outlet attachment (see Figure 8):

Attach the drain body to a lavatory/sink by applying a bead of plumber's putty under the rim of the flange and placing it into the drain outlet.

Press the flange down to spread the plumber's putty.

Slip the rubber washer and the metal washer over the drain body under the fixture.

Screw the locknut clockwise into the drain body.

Wipe off all excess plumbers putty from around the flange.

Apply pipe compound to the threads of the drain body, and screw the tailpiece on the drain body.

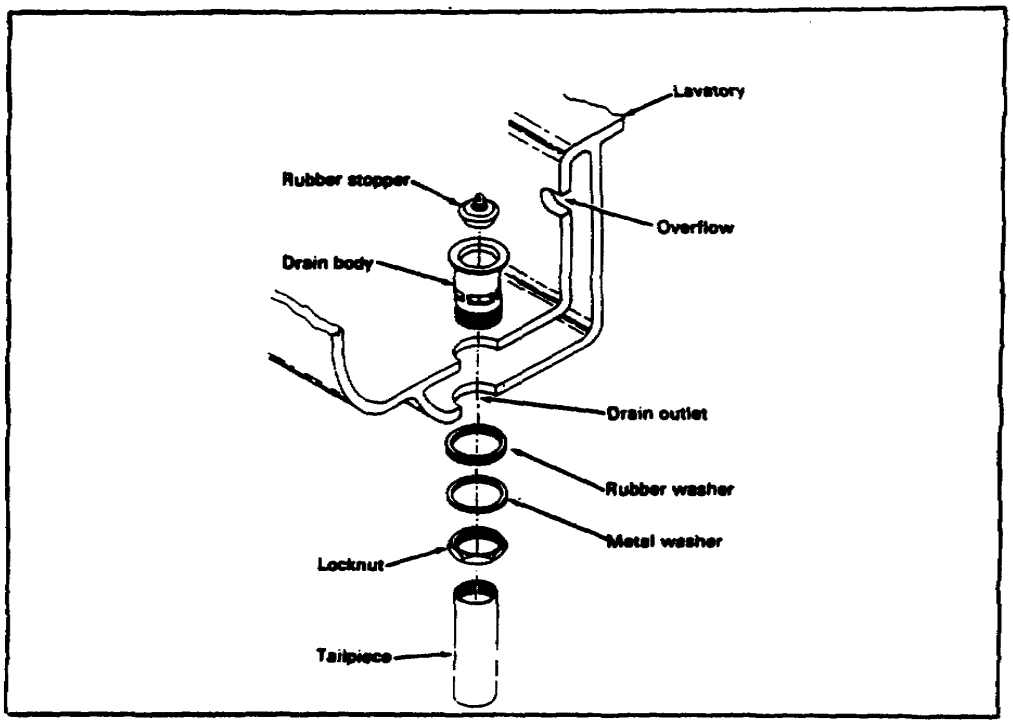

FIGURE 8. PULL-OUT (PO) PLUG OUTLET ATTACHMENTS

Pop-up type of outlet attachment. Use the following steps to attach a pop-up drain (see Figure 9):

Apply pipe joint compound to the upper drain body, and screw the flange onto the drain body.

Apply plumber's putty under the rim of the flange, and place it into the drain outlet.

Press down on flange to spread the plumber's putty.

Slip the rubber washer and metal washer over the drain body under the fixture.

Screw the locknut hand-tight onto the drain body, and tighten the locknut with a wrench.

Following manufacturer's instructions, install the pop-up mechanism into the drain tee.

Apply joint compound to the lower threads of the drain body, and screw the drain tee onto the body. Make sure the pop-up pivot rod faces the rear center of the fixture.

Apply pipe joint compound to the tailpiece threads, and screw the tailpiece onto the drain tee.

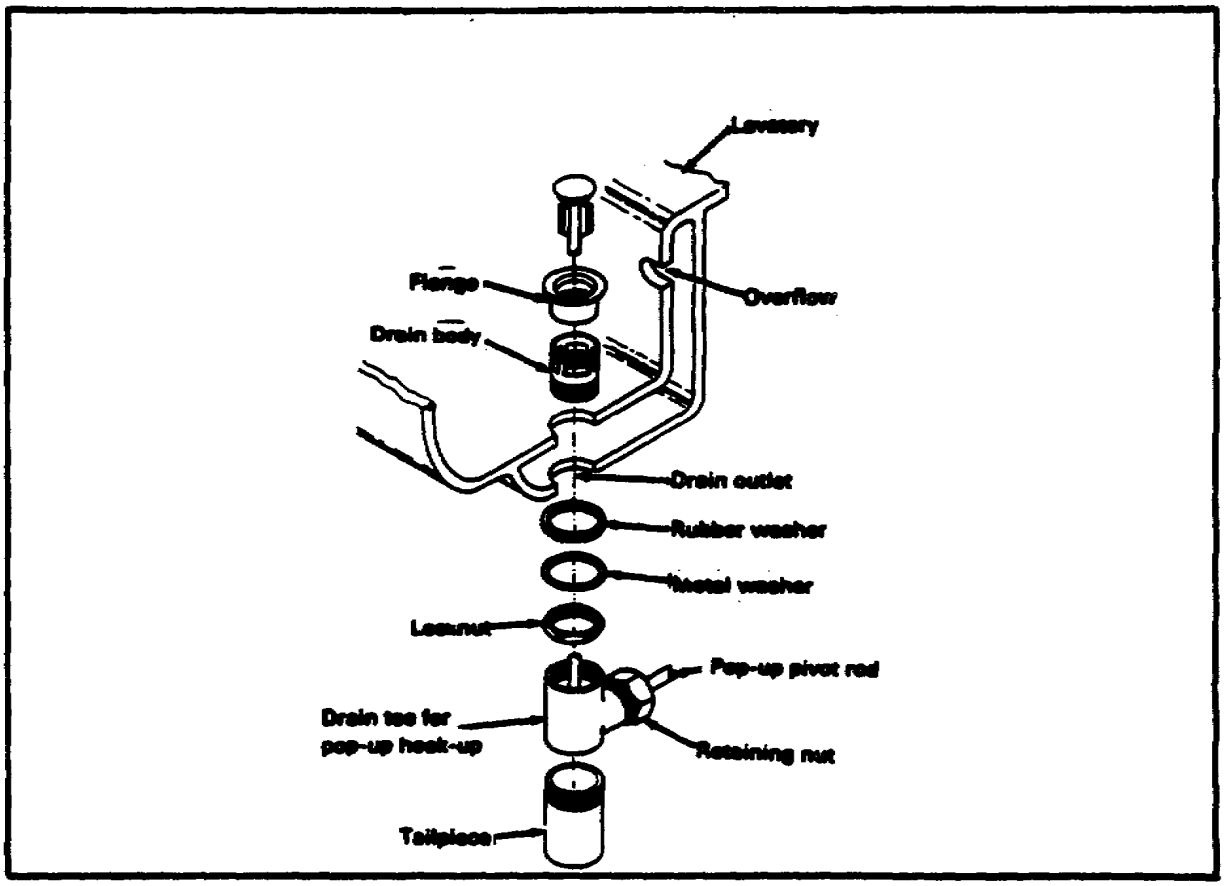

FIGURE 9. POP-UP PLUG OUTLET ATTACHMENTS

Kitchen sink drain outlet attachment. Use the following steps to attach a strainer type drain (see Figure 10):

Apply plumber's putty to the bottom of the flange, and set the drain body into the drain outlet.

Press the drain body down firmly to spread the plumber's putty.

Slip the gasket and the metal washer onto the drain body under the sink.

Screw the locknut hand-tight onto the drain body, and tighten it with a wrench.

Wipe off all excess plumber's putty from around the flange.

Slide the coupling nut onto the tailpiece.

Using both hands, slide the plastic sleeve onto the drain body, and attach the tailpiece by screwing the coupling nut hand-tight onto the drain body.

Tighten nut with a wrench.

NOTE: Attach all lavatory or sink drain outlets using manufacturer's instructions.

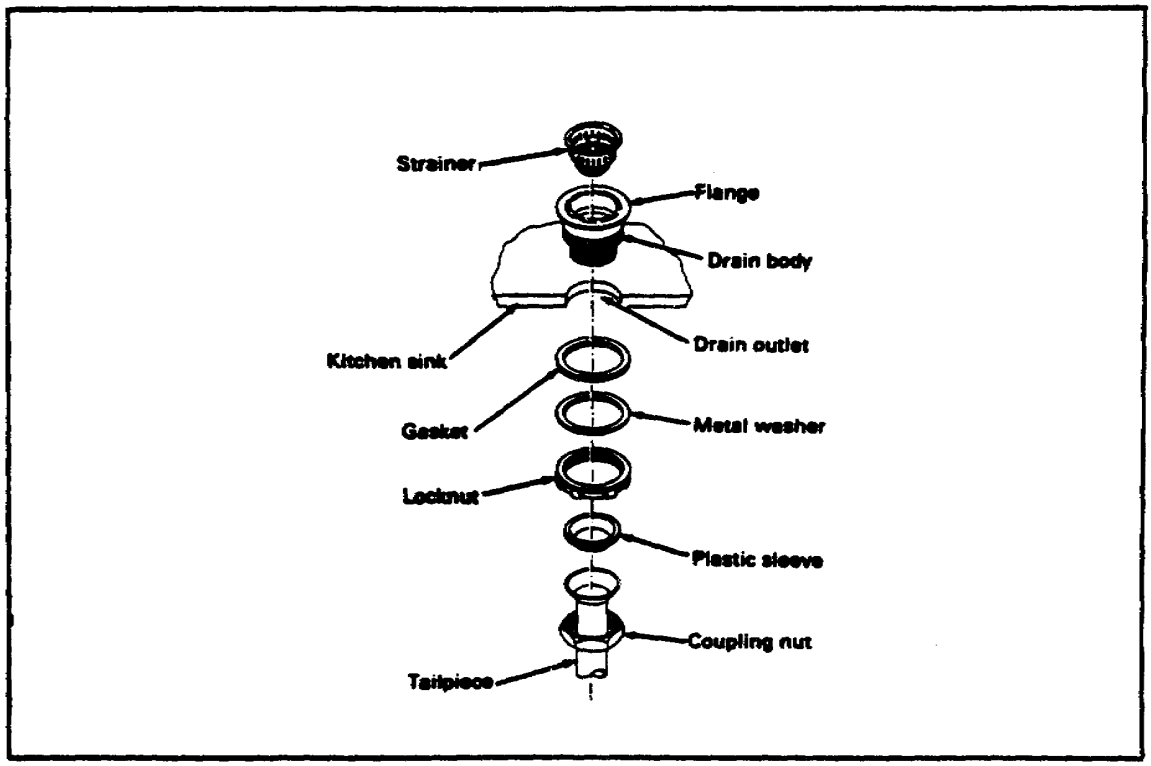

FIGURE 10. KITCHEN SINK OUTLET ATTACHMENTS

Learning Event 4
SELF-CHECK EXERCISE

1. What material is applied under the flange for installation onto a lavatory and/or sink?
   A. Rubber gasket
   B. Rubber washer
   C. Plumber's putty
   D. Pipe joint compound

2. Match the items that are attached underneath the lavatory in the correct order of installation for a pullout (PO) type plug.
   A. Metal washer
   B. Rubber washer
   C. Tailpiece
   D. Locknut

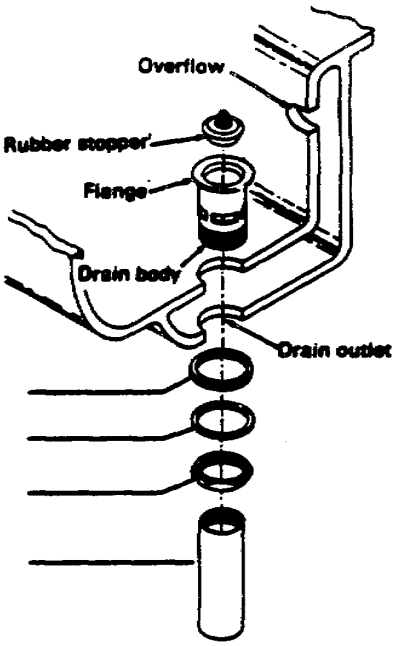

SELF-CHECK EXERCISE SOLUTIONS

1. C. Plumber's putty
2. B. Rubber washer
   A. Metal washer
   D. Locknut
   C. Tailpiece

3. Match the items that are attached underneath the lavatory in the correct order of installation for a pop-up type plug.
   A. Metal washer
   B. Rubber washer
   C. Locknut
   D. Tailpiece
   E. Drain tee

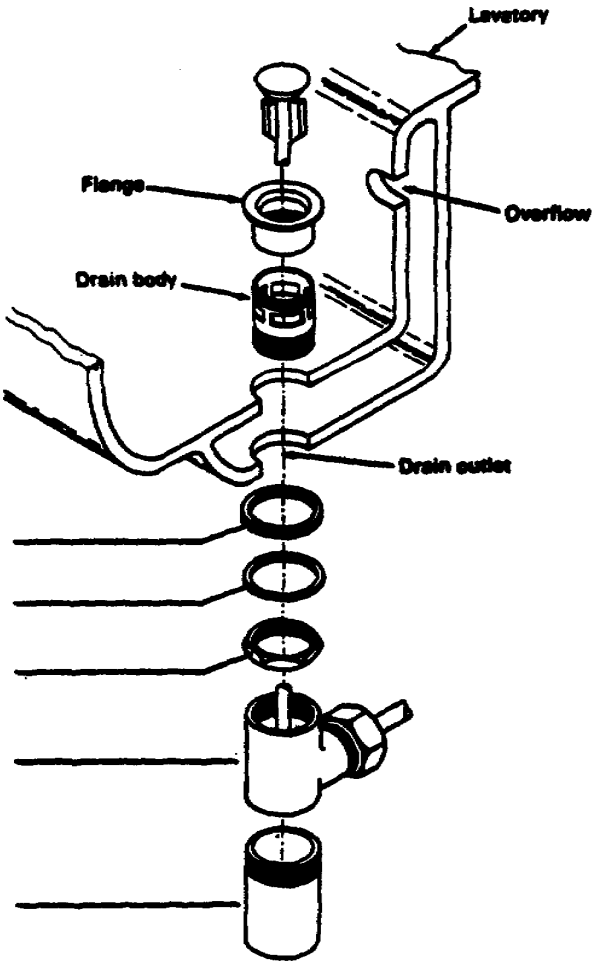

SELF-CHECK EXERCISE SOLUTIONS

3. B. Rubber washer
   A. Metal washer
   C. Locknut
   E. Drain tee
   D. Tailpiece

4. Match the items that are attached underneath a kitchen sink in the correct order of installation.
   A. Plastic sleeve
   B. Gasket
   C. Metal washer
   D. Tailpiece
   E. Locknut
   F. Coupling nut

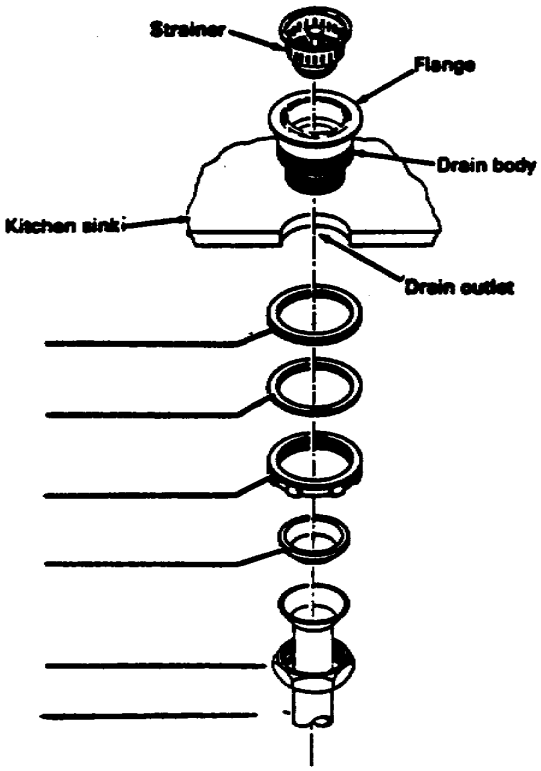

SELF-CHECK EXERCISE SOLUTIONS

4. B. Gasket
   C. Metal washer
   E. Locknut
   A. Plastic sleeve
   F. Coupling nut
   D. Tailpiece

Learning Event 5:
INSTALLING P-TRAPS

A lavatory/sink waste connection from the tailpiece to the rough-in plumbing drain outlet is made by using a P-trap. The P-trap is formed using the following parts: U-shaped trap, drainpipe with one curved end, and three slip nuts and washers. P-traps come in two types and sizes: fixed or swiveled and 1¼ inches or 1½ inches.

Installing a P-trap. Use the following steps to connect the lavatory/sink P-trap (see Figure 11):

Slide escutcheon, slip nut, and rubber washer over the straight end of the drainpipe.

Slide straight end of drainpipe into rough-in plumbing.

Fasten slip nut hand-tight onto rough-in plumbing.

Slide slip nuts and then rubber washers over curved end of drainpipe and tailpiece.

Slide trap's lowest end onto drainpipe and highest end onto tailpiece.

Fasten slip nuts hand-tight onto trap.

Line up the connections, and tighten all slip nuts.

Slide escutcheon against the wall.

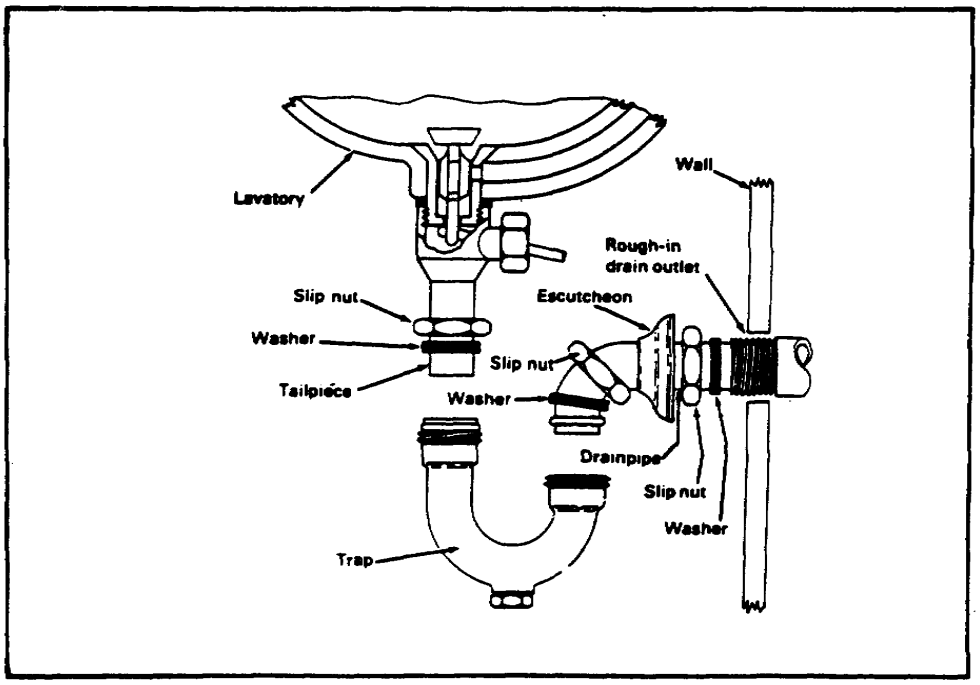

FIGURE 11. INSTALLING A P-TRAP

Learning Event 5
SELF-CHECK EXERCISE

Identify each item that is used to install a P-trap.

A._____
B._____
C._____
D._____

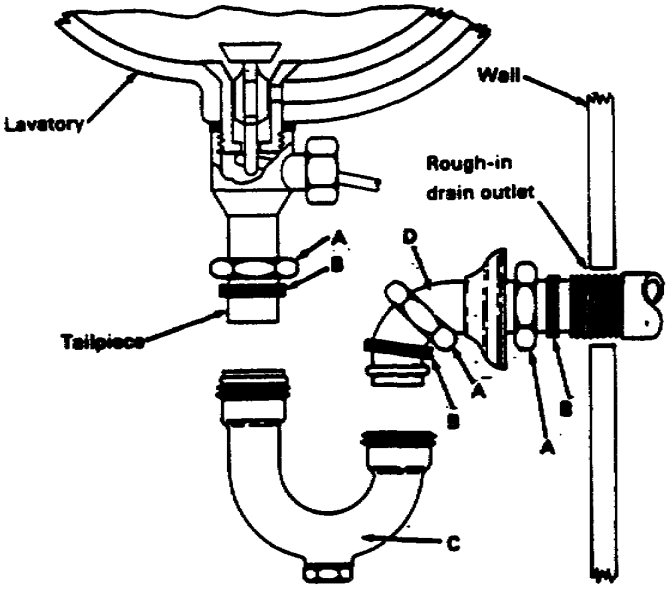

SELF-CHECK EXERCISE SOLUTIONS

A. Slip nut
B. Washer
C. Trap
D. Drainpipe

Learning Event 6:
INSTALLING SHUTOFF ANGLE VALVES

A lavatory/sink requires both hot- and cold-water supply service. The water service plumbing is connected from the rough-in water lines to shutoff valves and from the valves to the hot- and cold-water faucets. When the rough-in plumbing comes out from the wall, use shutoff angle valves. When the rough-in plumbing comes up through the floor, use straight shutoff valves.

Installing shutoff angle valves to steel pipe. Use the following steps to install angle valve on threaded galvanized pipe (see Figure 12):

Check and clean the threads of the rough-in water pipe.

Slide the escutcheon on the pipe, and push it against the finished wall. Coat threads with pipe joint compound.

Screw angle valve hand-tight on threads, and then tighten with wrench. Make sure the valve's other opening is facing up towards the faucets.

Set valve in closed position.

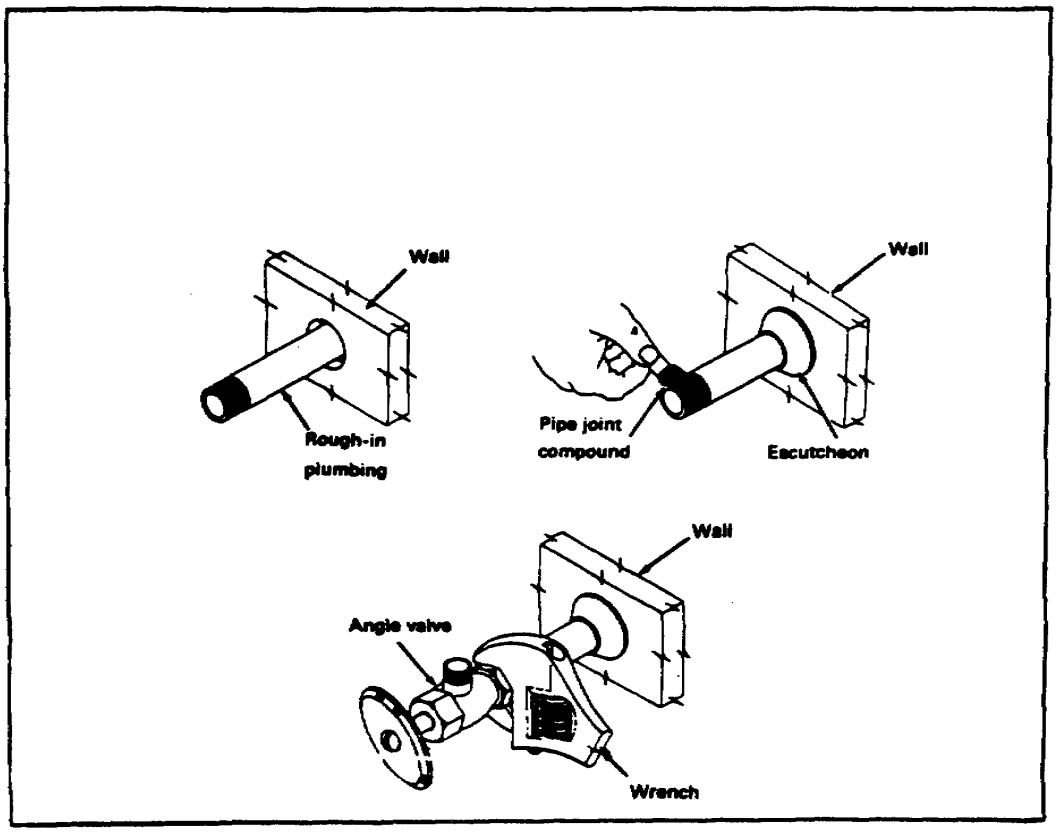

FIGURE 12. INSTALLING SHUT OFF ANGLE VALVE, STEEL PIPE

Installing shutoff angle valves to rigid copper tubing. Use the following steps to install an angle valve to rigid copper tubing (see Figure 13):

Check and clean the copper tubing.

Slide the escutcheon, coupling nut, and compression ring onto the tubing.

Slide the valve onto the tubing, and screw the coupling nut hand-tight onto the valve. Tighten coupling nut with a wrench. Make sure the valve's other opening is facing up towards the faucets.

Set valve in closed position.

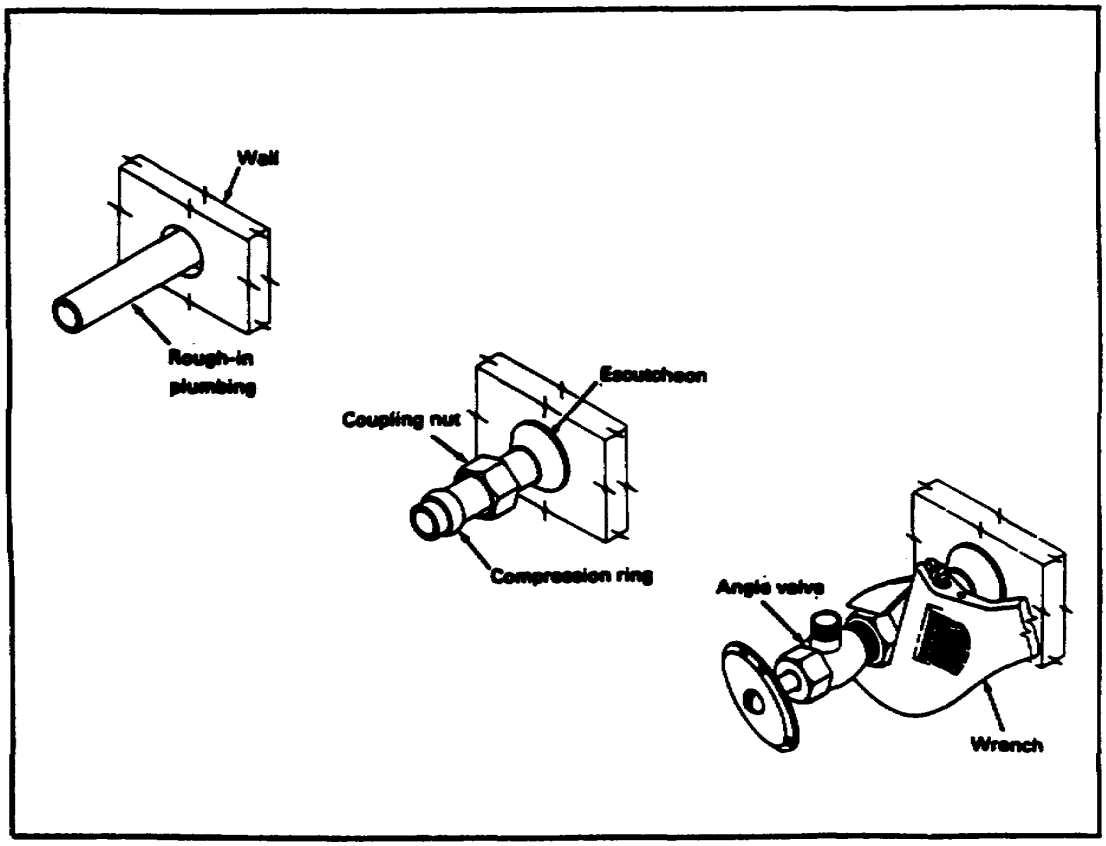

FIGURE 13. INSTALLING SHUTOFF ANGLE VALVE, COPPER PIPE

Installing shutoff angle valves to plastic pipe. Use the following steps to install a shutoff angle valve to plastic pipe (see Figure 14):

Clean and apply primer around the outside end of the rough-in plumbing.

Apply solvent cement around the outside end of the rough-in plumbing.

Apply solvent around the outside of the smooth end of the male adaptor, and push it onto the end of the rough-in plumbing.

Apply pipe joint compound to the shutoff valve threads, and screw valve hand-tight into the female adaptor.

Tighten connection using two wrenches: one to hold the adaptor, the other to tighten the valve connection. Make sure the valve's other opening is facing up toward the faucet.

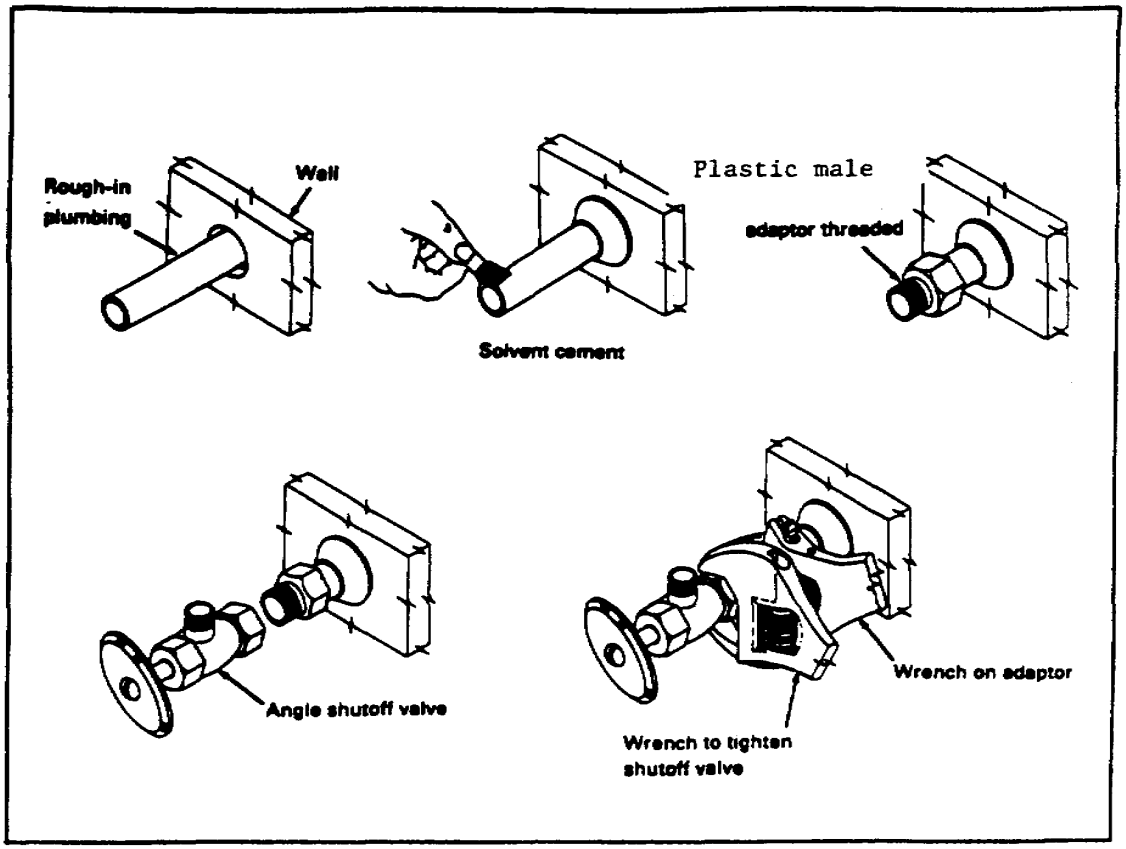

FIGURE 14. INSTALLING SHUTOFF ANGLE VALVE, PLASTIC PIPE

Learning Event 6
SELF-CHECK EXERCISE

1. Match steps in the correct order to install a shutoff angle valve to galvanized steel pipe.
   A. Screw angle valve on hand-tight, and tighten with a wrench.
   B. Check and clean threads of rough-in water pipe.
   C. Slide escutcheon on pipe to wall, and coat pipe threads with pipe joint compound.

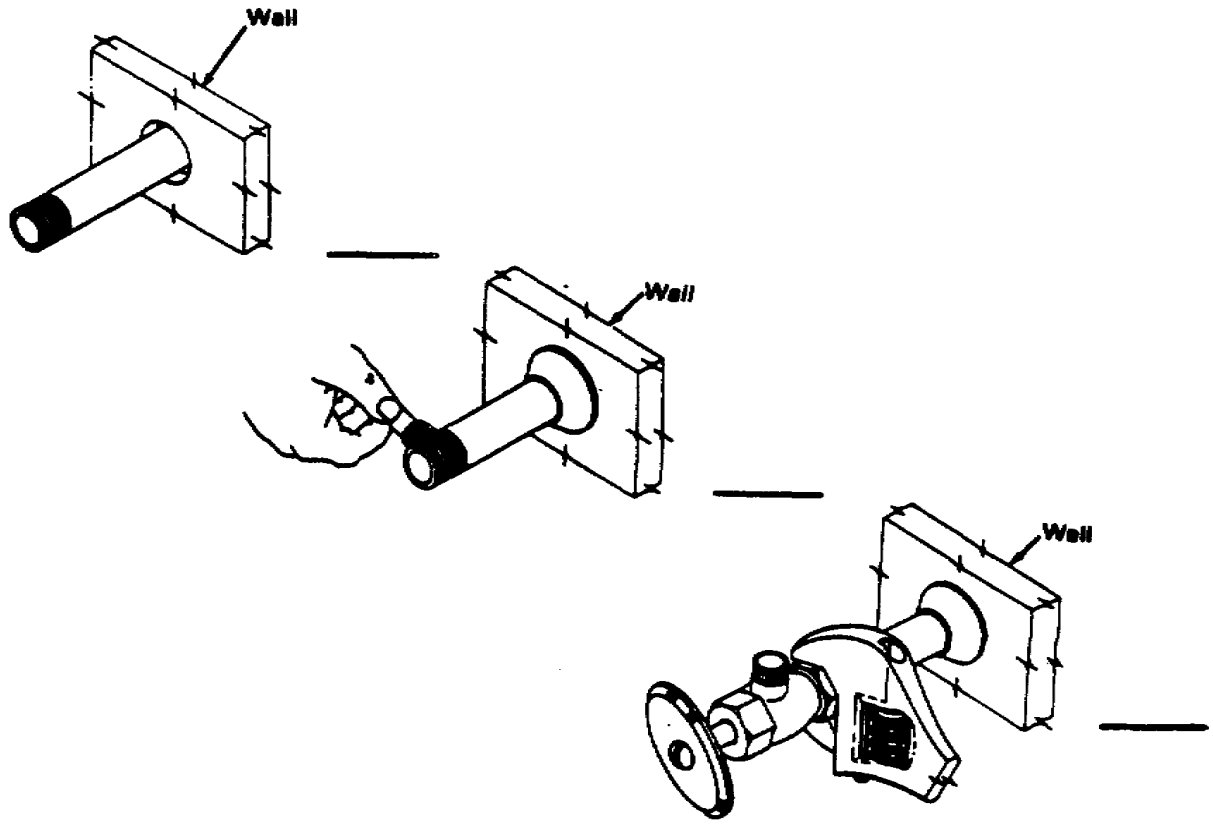

SELF-CHECK EXERCISE SOLUTIONS

1. B
   C
   A

2. Match the steps in the correct order to install a shutoff angle valve to rigid copper tubing.

A. Slide valve onto tubing, and screw coupling nut hand-tight on valve. Tighten nut with a wrench.

B. Check and clean end of rough-in water line.

C. Slid escutcheon, coupling nut, and compression ring onto the tubing.

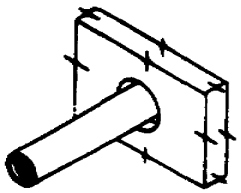

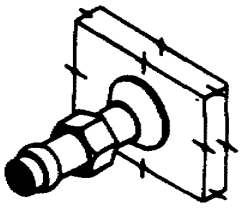

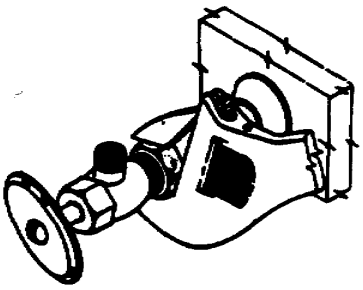

SELF-CHECK EXERCISE SOLUTIONS

2. B
   C
   A

3. Match the steps in the correct order to install a shutoff angle valve to plastic pipe.

A. Apply pipe joint compound to the shutoff male adapter, and screw valve hand-tight into the female adaptor.
B. Clean and apply primer around the outside end of the rough-in plumbing.
C. Tighten connection using two wrenches: one to hold the adaptor, the other to tighten the valve connection. Make sure valve's other opening is facing up toward the faucet.
D. Apply solvent around the inside of the smooth end of the female adaptor, and push it onto the end of the rough-in plumbing.
E. Apply solvent cement around the outside end of the rough-in plumbing.

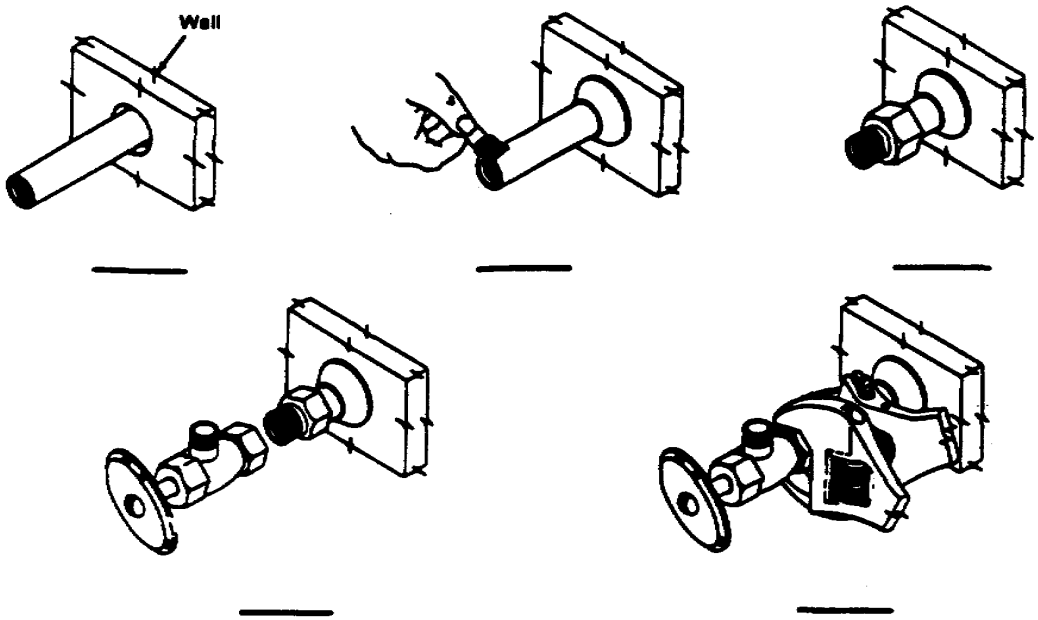

SELF-CHECK EXERCISE SOLUTIONS

3. B
   E
   D
   A
   C

Learning Event 7:
INSTALLING FLEXIBLE TUBING

The hot- and cold-water flexible water supply connections are from the shutoff valves to the threaded end of each faucet. The flexible tube comes in several lengths and is made of chrome-plated copper. The tubes are bent to fit and attached with coupling nuts.

Bending flexible tubing. Use the following steps to bend flexible tubing (see Figure 15):

Slide the flexible tubing into the correct spring bender.

Place both hands on the spring bender, and apply pressure until it is bent as you want it.

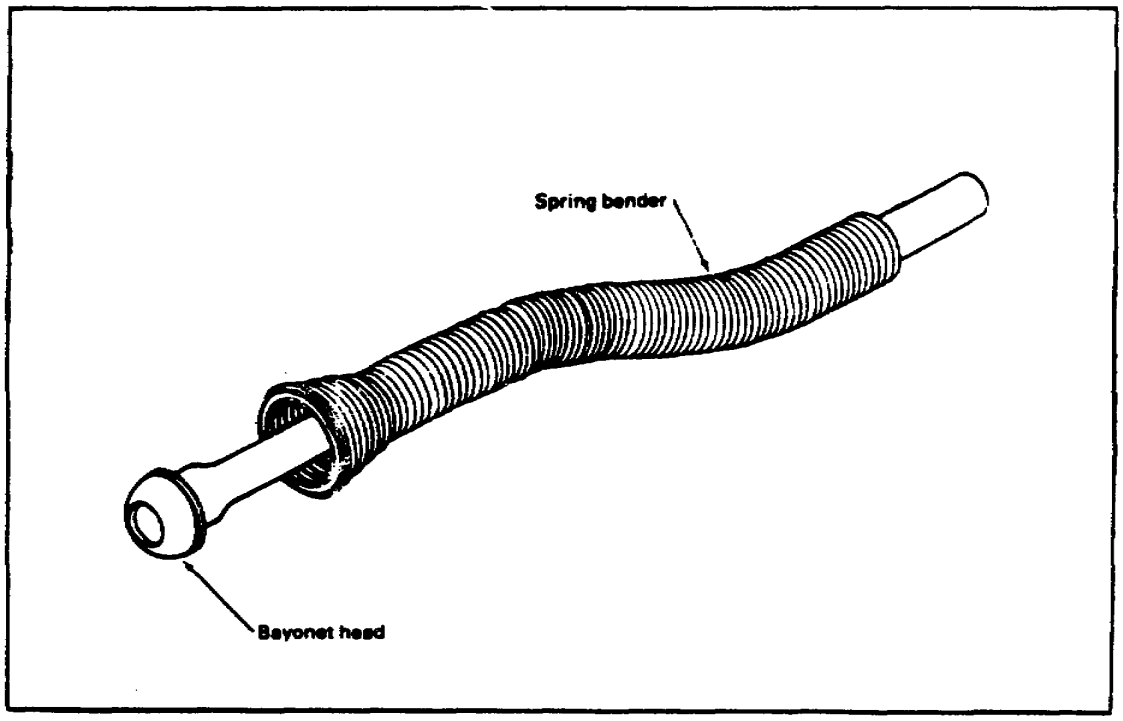

FIGURE 15. BENDING FLEXIBLE TUBING

NOTE: Spring benders come in a set with several diameter sizes.

Installing the flexible tube connector for water service. Use the following steps to install the flexible tube connector (see Figure 16):

Slide coupling nut onto tube up to the bayonet head.

Screw coupling nut hand-tight onto faucet threads, and tighten with a basin wrench.

Slide coupling nut and compression ring onto the lower end of tube, and place tube into shutoff valve.

Screw coupling nut hand-tight onto valve, and tighten with a wrench.

NOTES:

1. This method of it installation is for both hot-water (left side) and cold-water (right side) water service lines.

2. If the tube is too long to connect to the shutoff valve, cut it to get a good fit.

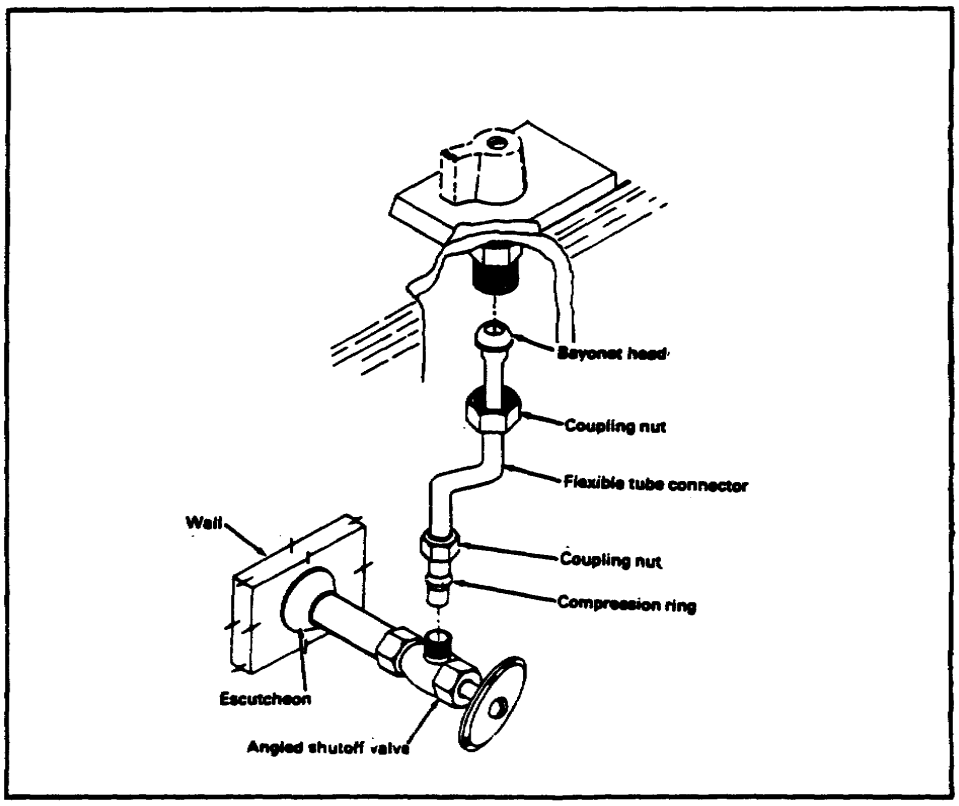

FIGURE 16. INSTALLING FLEXIBLE TUBING

Learning Event 7
SELF-CHECK EXERCISE

Fill in the blank with your response.

1. The flexible tubing is _____as you want it with a spring bender for proper installation.

2. Using the letters A, B, C, and D, list the correct order for installing the flexible tubing.

   A. Slide coupling nut and compression ring onto tubing.
   B. Screw coupling nut on hand-tight and tighten with a basin wrench.
   C. Slide coupling nut onto tube up to the bayonet head.
   D. Screw coupling nut hand-tight onto shutoff valve, and tighten with a wrench.

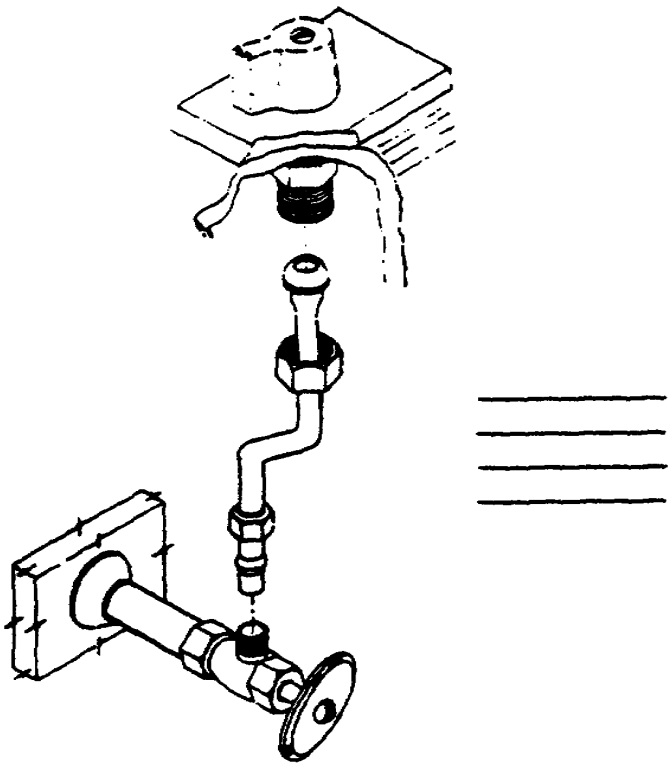

SELF-CHECK EXERCISE SOLUTIONS

1. Bent
2. C
   B
   A
   D

Learning Event 8:
TESTING FOR MECHANICAL OPERATION AND LEAKS

The installation of a new lavatory/sink requires that the fixture be tested for mechanical operation and leaks. Check the operation of each faucet and water retaining plug, such as PO and pop-up type. Then check all water and waste joint connections for leaks, as follows (see Figure 17):

Turn on water at meter stop valve.

Open fixture's shutoff valves.

Turn faucets on and off to check their operation.

With the water running, check all water and waste joint connections for leaks.

With the fixture filled with water, check operation of drain plug.

Make any repairs or adjustments at once

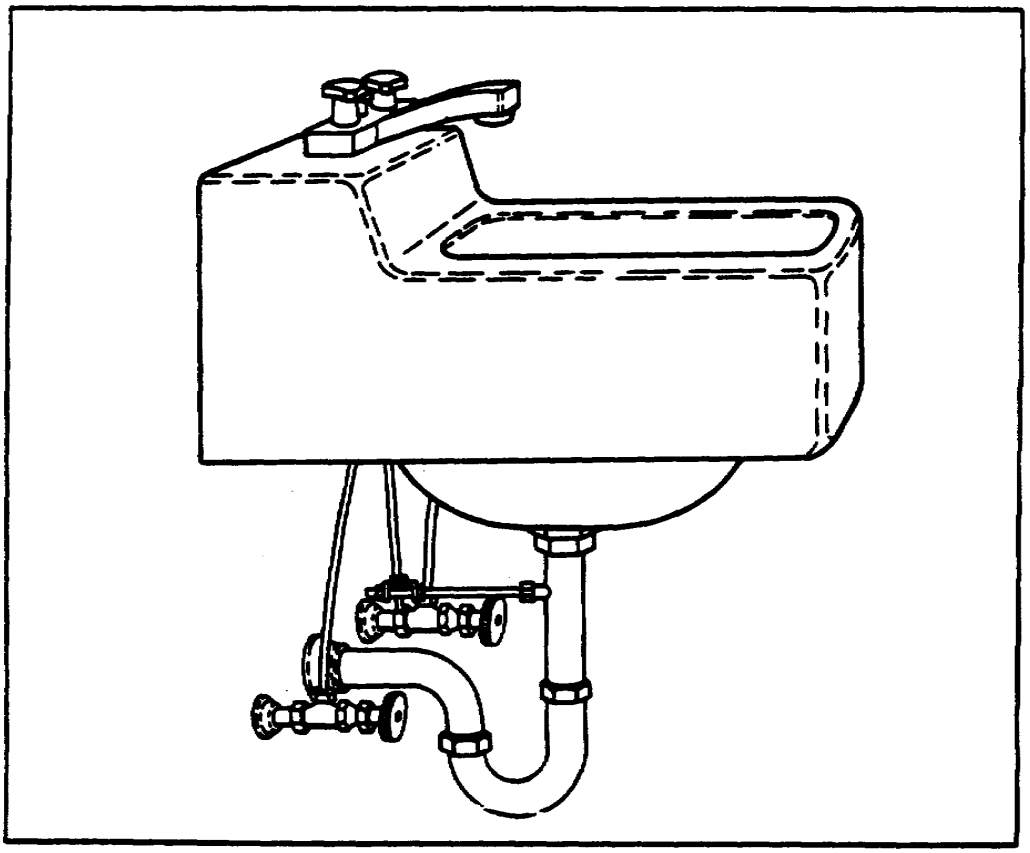

FIGURE 17. TESTING FOR MECHANICAL OPERATION AND LEAKS

Learning Event 8
SELF-CHECK EXERCISE

Fill in the blanks with your responses.
When you install a new lavatory or sink, check for_____ and _____.

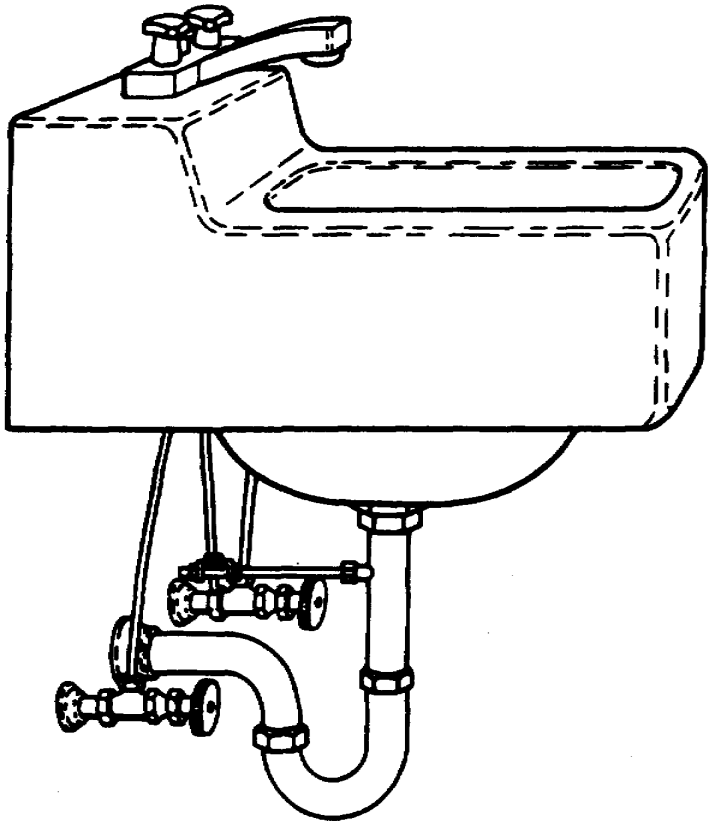

SELF-CHECK EXERCISE SOLUTIONS

Mechanical operation,, leaks

Lesson 1
REVIEW EXERCISE

Check your understanding of Lesson 1 by completing this review exercise. Try to complete all of the questions without looking back at the lesson. When you are finished turn to the solutions at the end of the exercise and check your responses. If you missed any, go back and restudy the place in the lesson where the information is given.

1. What is this type of lavatory called?
   A. Trough
   B. Self-rimmed
   C. Wall-hung
   D. Pedestal

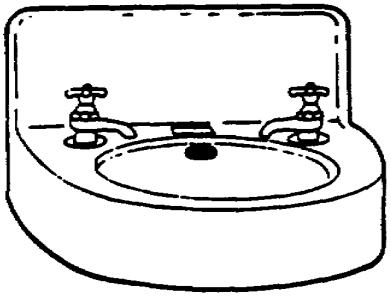

2. What is this type of sink called?
   A. Scullery
   B. Pedestal
   C. Single-compartment
   D. Slop

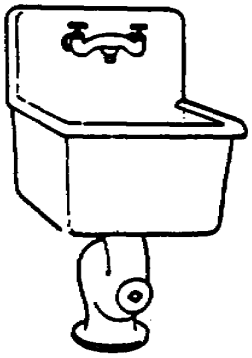

Solutions for this exercise are on page 36.

3. Which illustration, A or B, shows a mounting board installed correctly?

A.

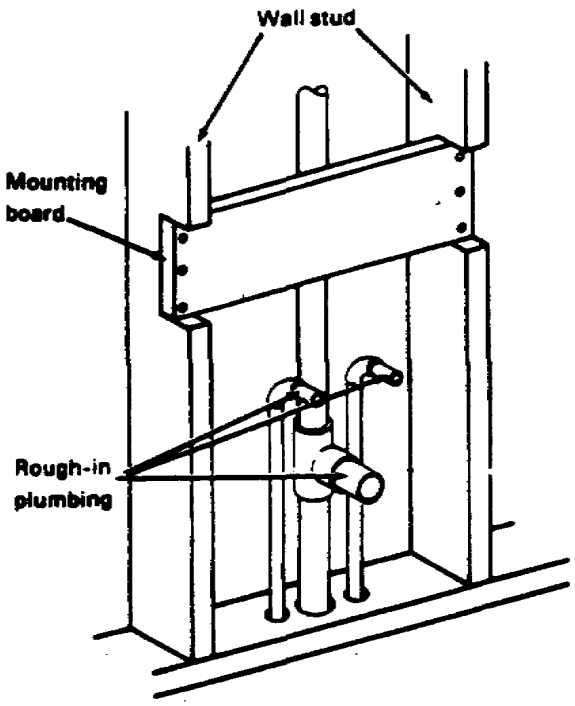

B.

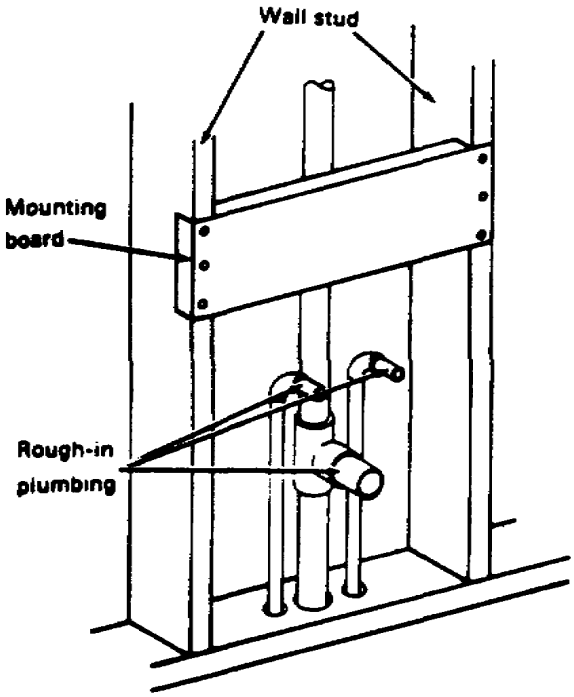

Fill in the blanks with your responses.

4. A mounting bracket installed at the correct height from the floor must be_____.

5. The lavatory must be _____ when placed on the mounting bracket.

6. Plumber's putty is applied to the _____ of a single faucet before setting it in place on a lavatory.

Solutions for this exercise are on page 36.

7. Match items underneath the lavatory in the correct order of installation.
   A. Metal washer
   B. Tailpiece
   C. Rubber washer
   D. Locknut

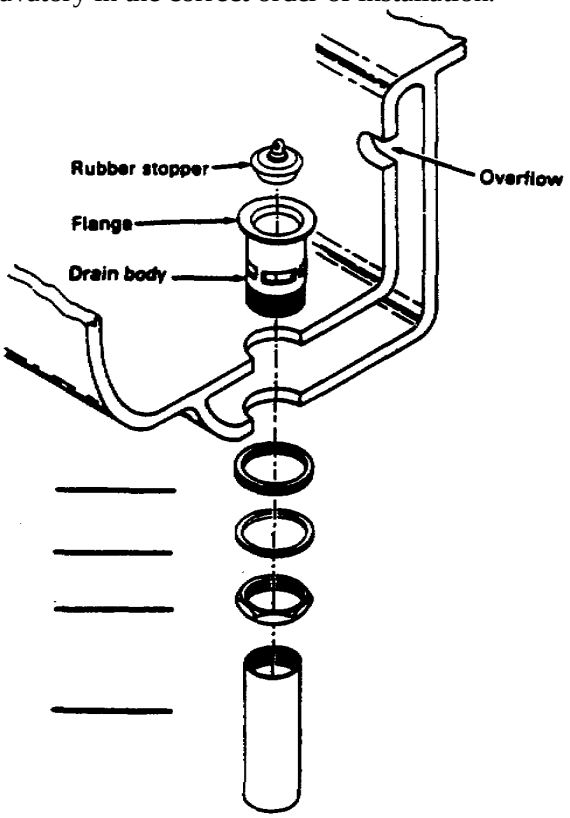

8. Match items underneath the sink in the correct order of installation.
   A. Metal washer
   B. Gasket
   C. Plastic sleeve
   D. Tailpiece
   E. Locknut
   F. Coupling nut

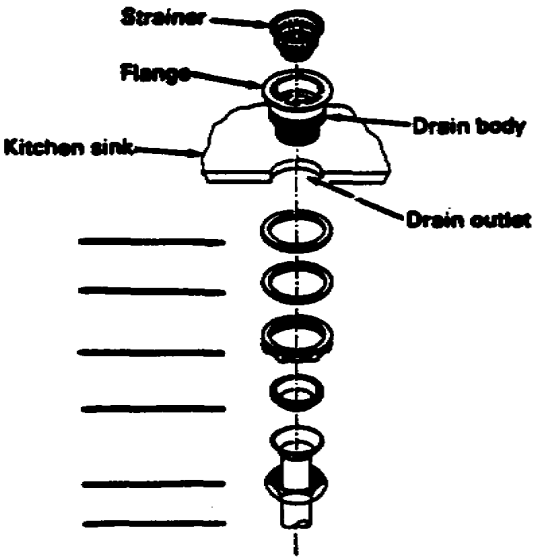

Solutions for this exercise are on page 36.

9. Identify each item required to install a P-trap.
   A._____
   B._____
   C._____
   D._____

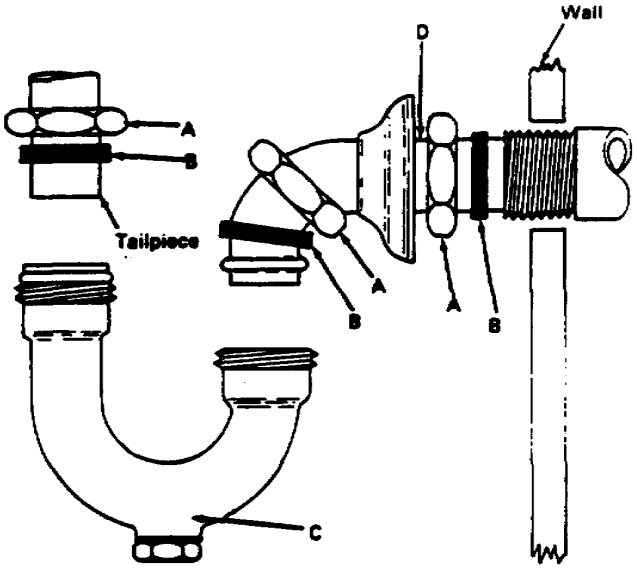

10. Which illustration, A or B, identifies an angle valve connection for rigid copper tubing?

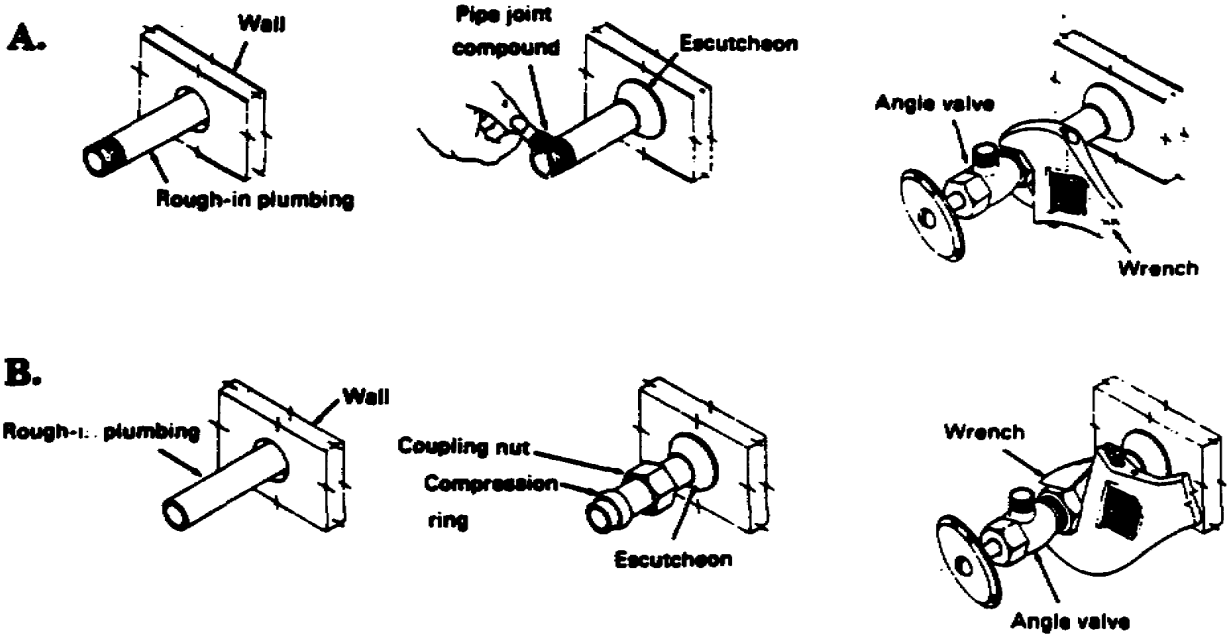

Solutions for this exercise are on page 36.

Fill in the blanks with your responses.

11. To connect a shutoff angle valve to rough-in plastic pipe, you need a_____.
12. A spring bender is used to _____the tubing for a good fit between the valve and faucet threads.
13. Identify each item required to install a water service connection for a lavatory/sink.
    A._____
    B._____
    C._____
    D._____

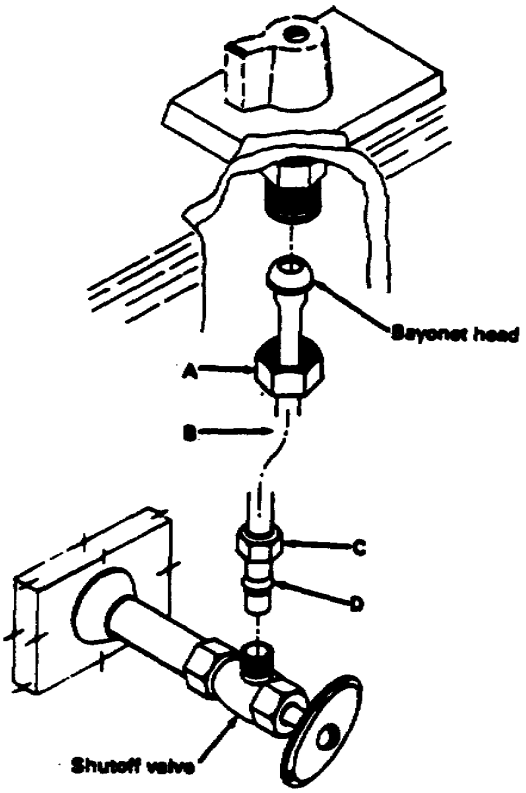

Solutions for this exercise are on page 36

REVIEW EXERCISE SOLUTIONS

1. C (Page 2)
2. D (Page 3)
3. B (Page 6)
4. Level (Page 7)
5. Level (Page 7)
6. Bottom or base (Page 10)
7. C (Page 12)
   A
   D
   B
8. B (Page 14)
   A
   E
   C
   F
   D
9. A Slip nut (Page 18)
   B Washer
   C Trap
   D Drainpipe
10. B (Page 21)
11. Female adaptor (Page 22)
12. Bend (Page 26)
13. A Coupling nut (Page 27)
    B Flexible tube connector
    C Coupling nut ring
    D Compression ring

Lesson 2
INSTALLATION OF WATER CLOSETS WITH FLUSHING DEVICES

OBJECTIVE
At the end of this lesson, you will be able to describe the procedures used to install water closets with tanks.

TASK
Task No. 051-248-1009, Install water closet with tank.

CONDITIONS
Given subcourse booklet number EN5113 and an examination response sheet, you will work at your own pace and in your own selected environment with no supervision.

STANDARDS
Within approximately 4 hours, you should be able to study the lesson resources, answer the review exercises, and select the correct response to each examination question. You must respond correctly to 70 percent of the examination questions in order to receive credit for this subcourse.

CREDIT HOURS
4

REFERENCES
FM 5-51K
TM 5-551K

Lesson 2
INSTALLATION OF WATER CLOSETS WITH FLUSHING DEVICES

Learning Event 1:
IDENTIFYING WATER CLOSETS

A water closet is a water-flushed plumbing fixture designed to receive and dispose of human waste. The method of flushing can be with either a flush tank or a flushometer valve. Water closets are made of vitreous china, and they can be installed directly on the floor or wall (see Figures 18 and 19).

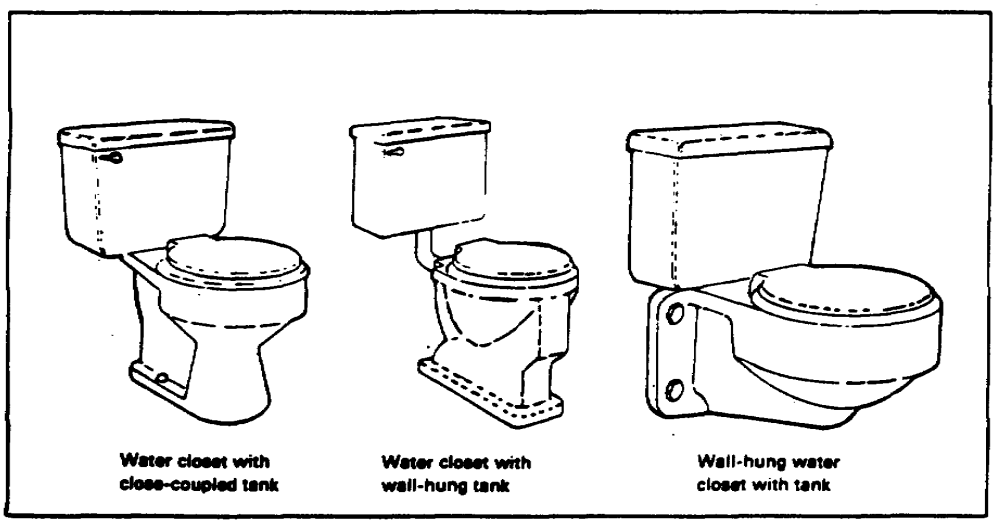

FIGURE 18. WATER CLOSETS WITH FLUSH TANKS

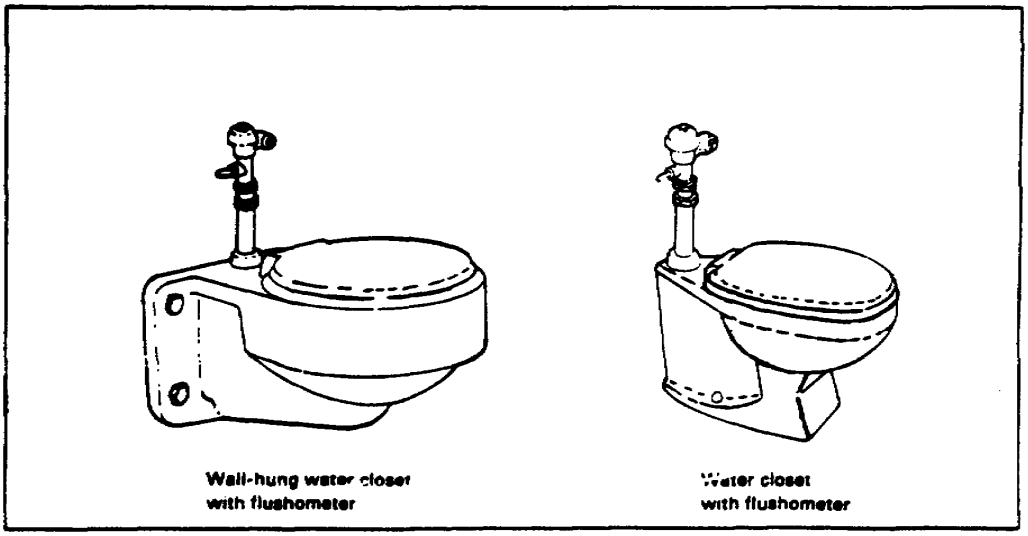

FIGURE 19. WATER CLOSETS WITH FLUSHOMETERS

Learning Event 1
SELF-CHECK EXERCISE

Match each water closet with its description.
A. Water closet with wall-hung tank
B. Water closet with flushometer
C. Water closet with close-coupled tank
D. Wall-hung water closet with tank

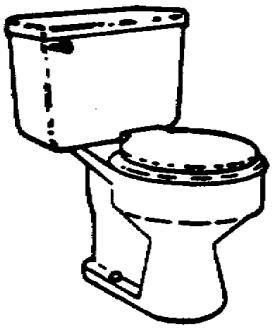

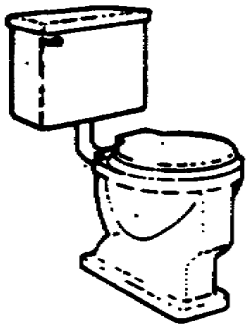

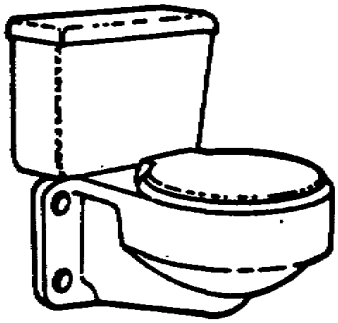

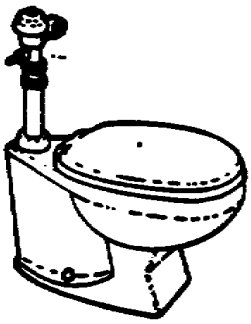

SELF-CHECK EXERCISE SOLUTIONS

C.
A.
D.
B.

Learning Event 2:
INSTALLING WATER CLOSETS

The majority of water closets are installed using a closet flange, a bowl, and a flush tank or a flushometer valve. The flange is connected to the rough-in plumbing and secured to the floor, the bowl is attached to the flange, and the flush tank or flushometer is connected to the bowl. Finally, water service is connected to the tank.

Installing a closet flange. Use the following steps to install a closet flange (see Figure 20):

Slip the closet flange onto the closet bend, and make the joint connection for the type of piping used.

Secure the flange to the floor with fasteners.

Slip bowl hold-down bolts into the bowl slots of the flange.

The flange is now ready for the bowl.

NOTES:
1. Flange joint connection to closet bend can be for cast-iron, plastic, and copper piping.
2. Flange can be secured to wooden, concrete, and tile floors, using the proper type fasteners.

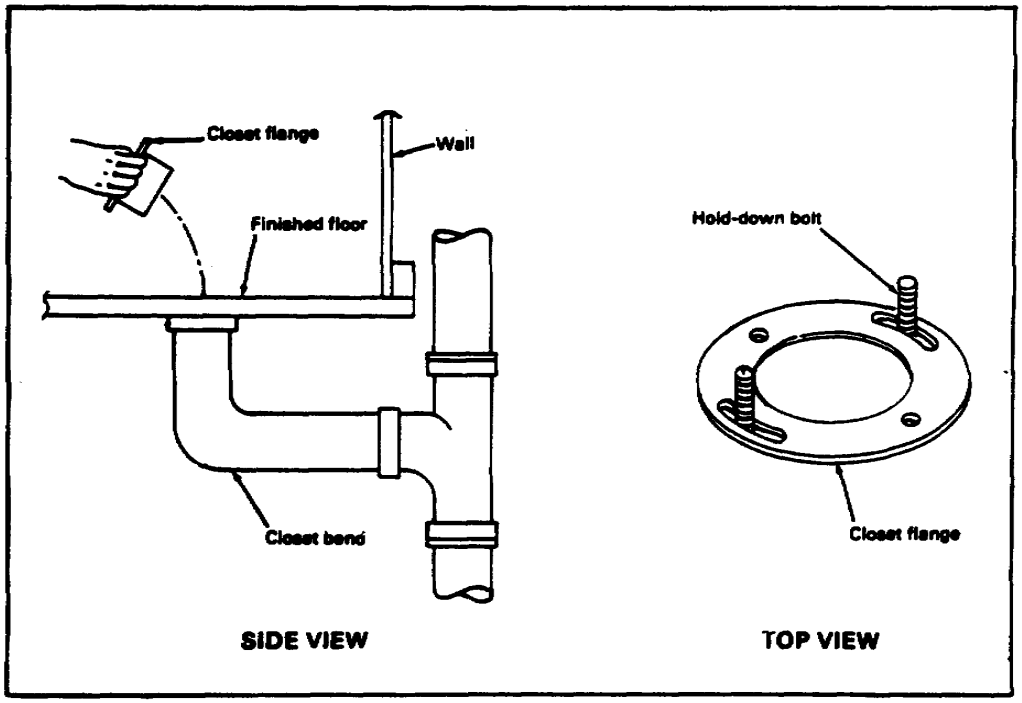

FIGURE 20. INSTALLING A CLOSET FLANGE

Preparing a water closet bowl for installation. Use the following steps to prepare the bowl for installation (see Figure 21):

Set the bowl upside down on paper to keep from scratching it.

Place the wax gasket evenly over the horn, with the tapered side against the bottom of the bowl.

Run a thick layer of putty around the base of the bowl.

The bowl is now ready to install.

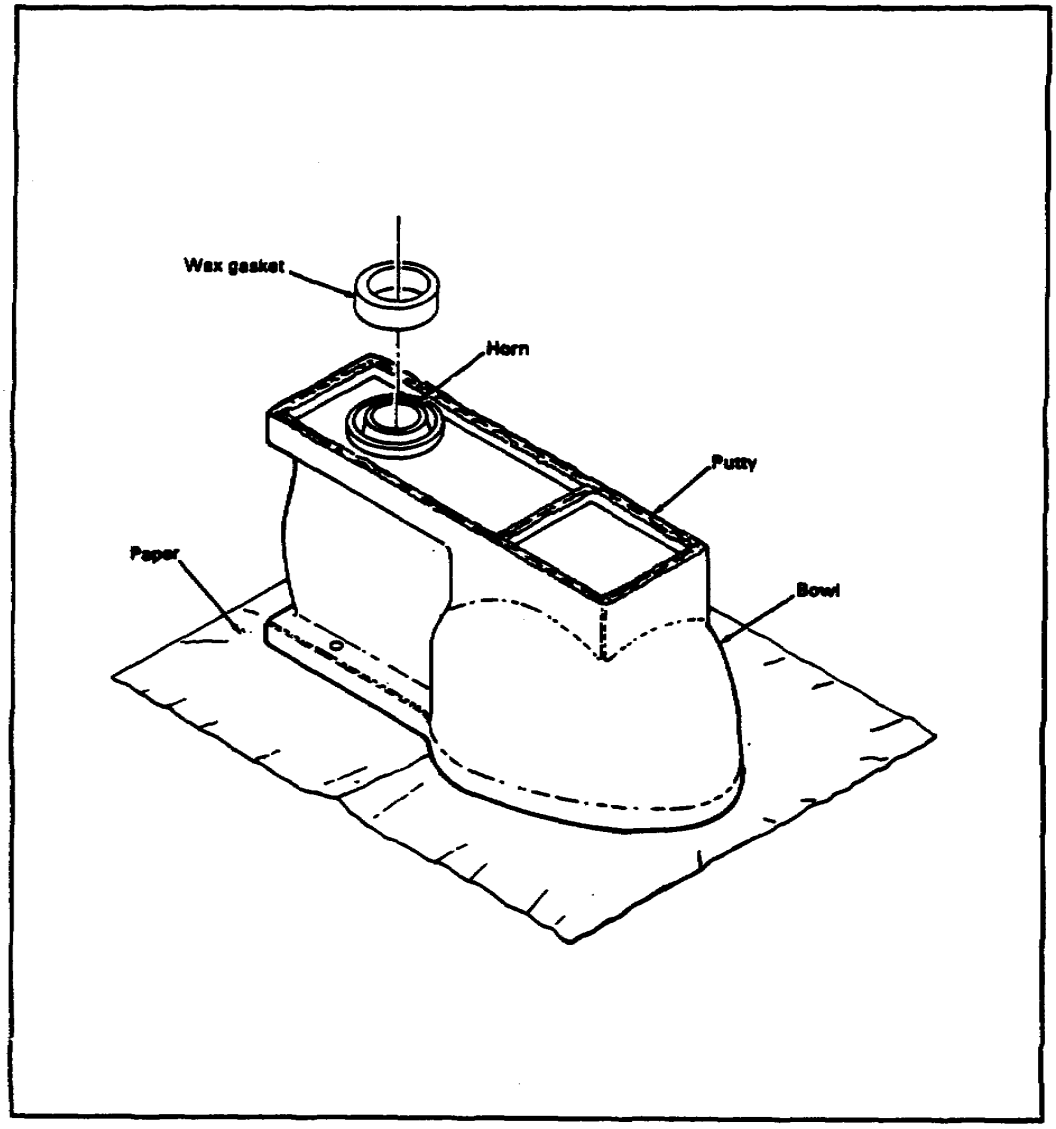

FIGURE 21. PREPARING CLOSET BOWL FOR INSTALLATION

Installing a water closet bowl to the floor. Use the following steps to install the bowl (see Figure 22):

Turn the bowl right side up, and place it so that the hold-down bolts pass through the bowl's bolt holes.

Slightly twist the bowl to smooth out the putty.

Firmly press down on the bowl to seat the wax gasket.

Place a washer over each bolt, and then fasten nuts on hand-tight.

Check to see if bowl is level. If it is, tighten nuts. If not, use thin metal shims until it is level, and then tighten nuts.

Snap bolt cap on.

NOTE: Do not overtighten the nuts, as this will cause the bowl to crack.

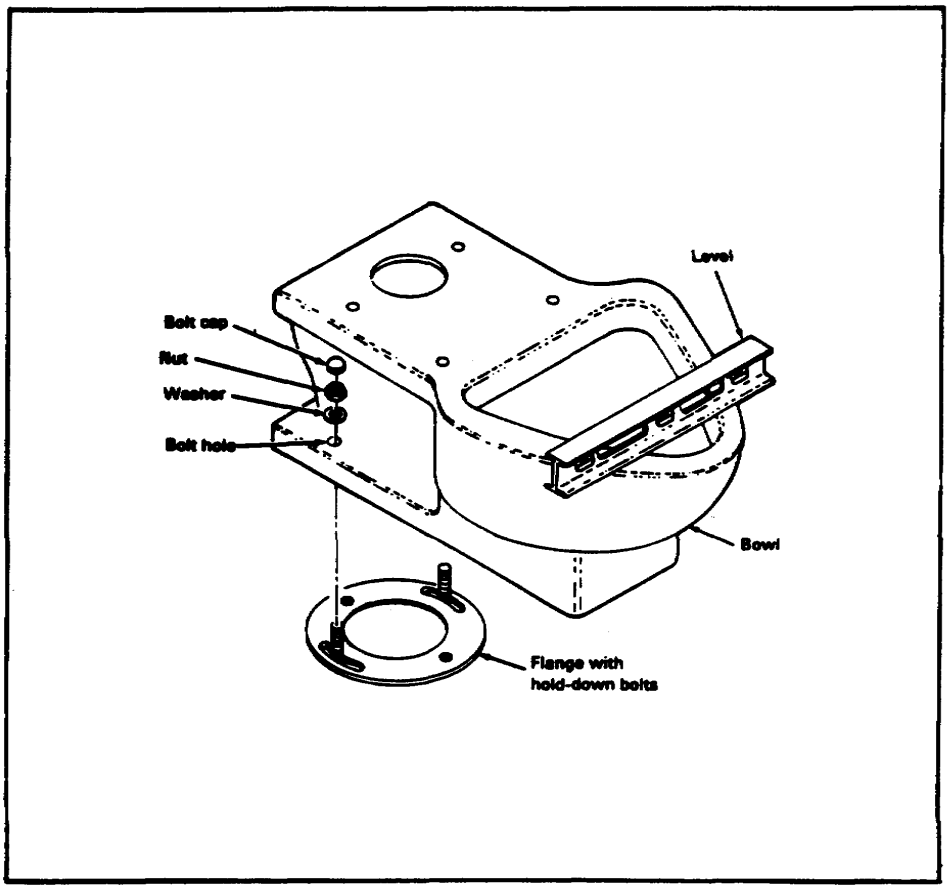

FIGURE 22. INSTALLING WATER CLOSET BOWL TO FLOOR

Installing a water closet bowl to the wall. Use the following steps to install a wall-hung closet bowl (see Figure 23):

Following manufacturer's instructions, install a carrier body and connect it to the rough-in plumbing.

Install sealing gasket into opening at rear of closet bowl.

Carefully pick up bowl, and set it against the wall so that the carrier's bolts pass through the bowl's holes on both sides.

Slide washer over each of the four bolts, and fasten nuts hand-tight to bolt.

Use a carpenter’s level to make sure bowl is level.

Tighten all nuts with a wrench and snap over nuts.

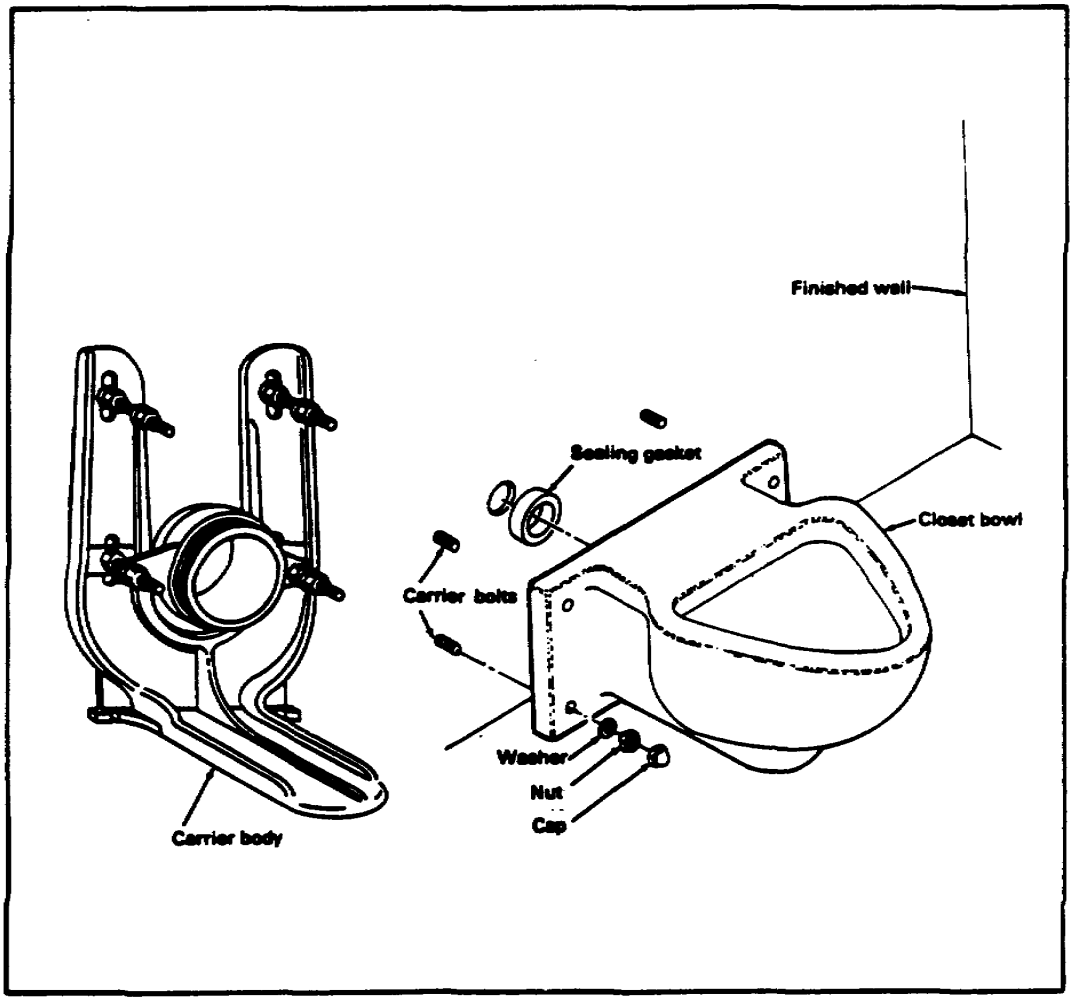

FIGURE 23. INSTALLING WATER CLOSET BOWL TO WALL

Learning Event 2
SELF-CHECK EXERCISE

Fill in the blanks.

1. After the closet flange is secured to the finished floor, the bowl _____are slipped in place.

2. A wax gasket is pressed evenly over the_____on the bottom of the bowl.

3. A thick layer of _____is placed around the_____on the bottom of the bowl.

4. The bowl is twisted slightly to_____out the_____.

5. To seat the wax gasket, push down _____on the _____.

6. The bowl must be_____for proper installation.

7. A wall-hung closet bowl requires a_____to install it against a wall.

SELF-CHECK EXERCISE SOLUTIONS

1. Hold-down bolts
2. Horn
3. Putty, base
4. Smooth, putty
5. Firmly, bowl
6. Level
7. Carrier body

Learning Event 3:
ATTACHING FLUSHING DEVICES

The flushing device for a water closet may be a flush tank or a flushometer. The flush tank is attached to the closet bowl or is wall-hung. The flushometer is attached to the closet bowl with a short vertical pipe. A flush tank has an assorted group of parts. These parts are connected in the tank, following the manufacturer's instructions, to form a flushing mechanism.

Attaching a close-coupled flush tank onto a closet bowl. Use the following steps to attach a flush tank to closet bowl (see Figure 24):

Push cone-shaped gasket onto tank outlet.

With bolt holes lined up, place tank on bowl.

Slip a rubber washer on each bolt and, from inside the tank, place the bolts with washers through the holes.

At the bowl, slide washer onto bolt, and fasten the nut to the bolt on each side.

Tighten nuts with a wrench to seat cone-shaped gasket and tank on bowl.

NOTE: A close-coupled flush tank is attached to a wall-hung closet bowl in the same manner.

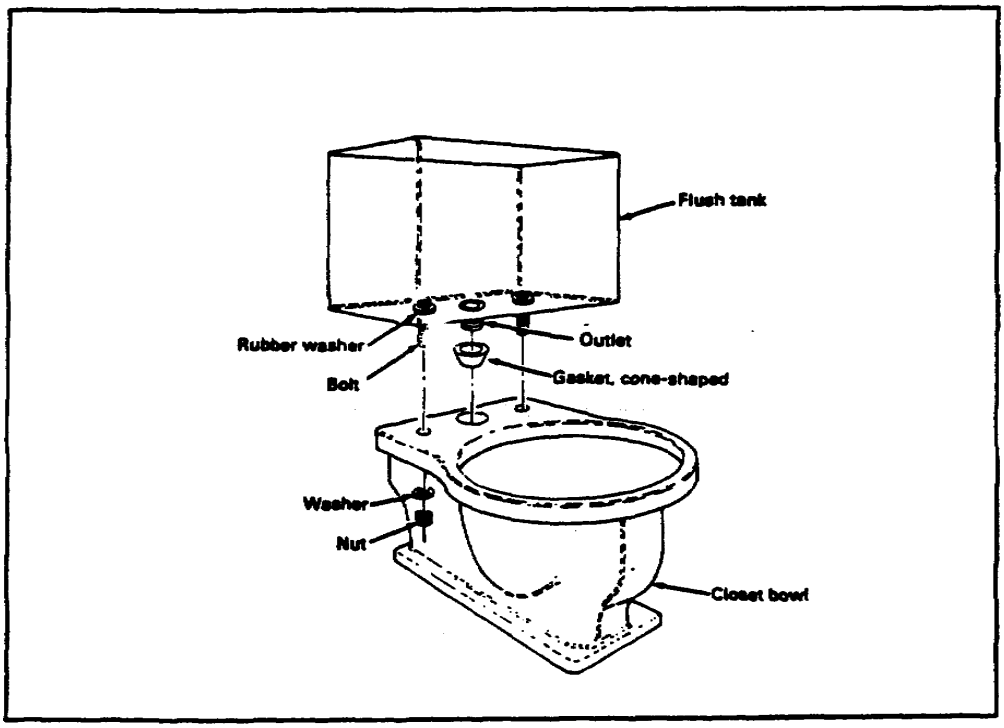

FIGURE 24. ATTACHING A CLOSE-COUPLED FLUSH TANK

Connecting a wall-hung tank to the closet bowl. Use the following steps to install a wall-hung flush tank to rear of closet bowl (see Figure 25):

Install mounting board, using recommended height from manufacturer's instructions.

Install tank outlet connection and spud connection, following manufacturer's instructions.

Slide spud flange and rubber washer onto threaded spud.

Slide slip-joint nut and then metal friction ring onto closet elbow for hookup to spud.

Place end of elbow against spud, and fasten slip-joint nut hand-tight onto spud.

Slide rubber washer onto tank outlet connection.

Slide slip-joint nut and metal friction ring onto closet elbow for hookup to tank outlet.

Fasten slip-joint nut hand-tight to tank's outlet connection.

Attach tank to wall with screw bolts. Make sure tank is level and lined up with bowl.

Tighten slip-joint nuts with wrench.

NOTE: Always make map to bowl connection using the manufacturer's instructions.

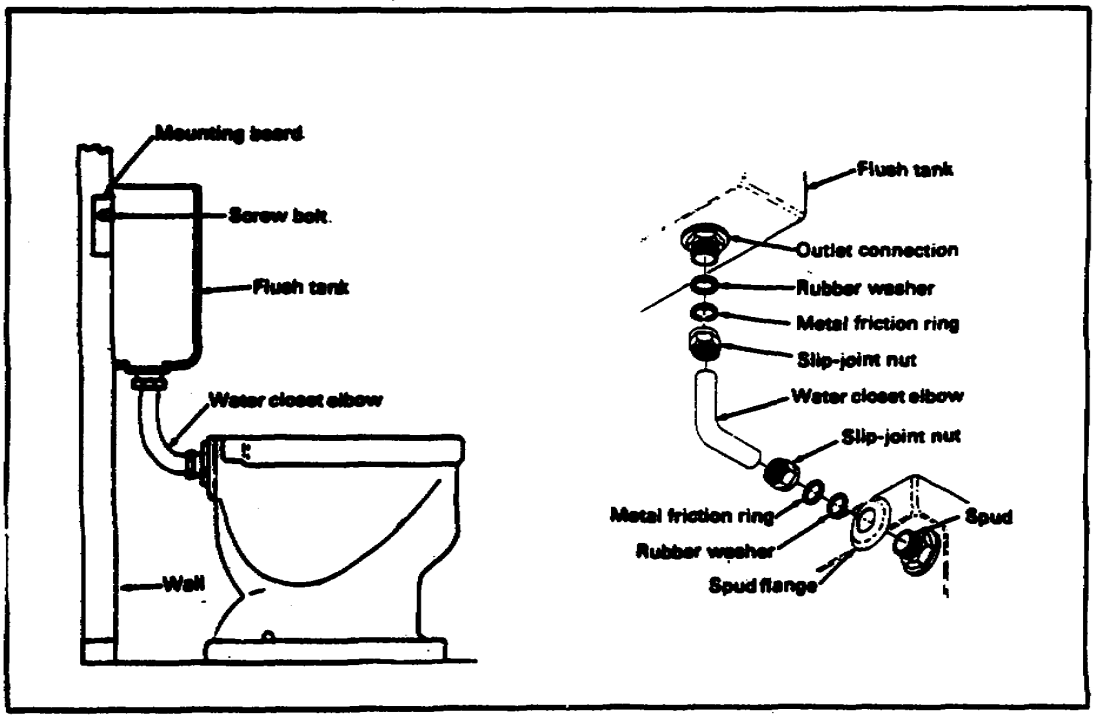

FIGURE 25. CONNECTING A WALL-HUNG TANK TO CLOSET BOWL

Learning Event 3
SELF-CHECK EXERCISE

1. Using the letters A through E, list in the steps in the correct order to install the flush tank to the closet bowl.

A. With bolt holes lined up, place tank on bowl.

B. At the bowl, slide washer onto bolt, and fasten the nut onto the bolt on each side.

C. Push cone-shaped gasket onto tank outlet.

D. Slip a rubber washer on each bolt, and from inside the tank, place the bolts with washers through the holes.

E. Tighten nuts with a wrench to seat cone-shaped gasket and tank on bowl.

_____
_____
_____
_____
_____

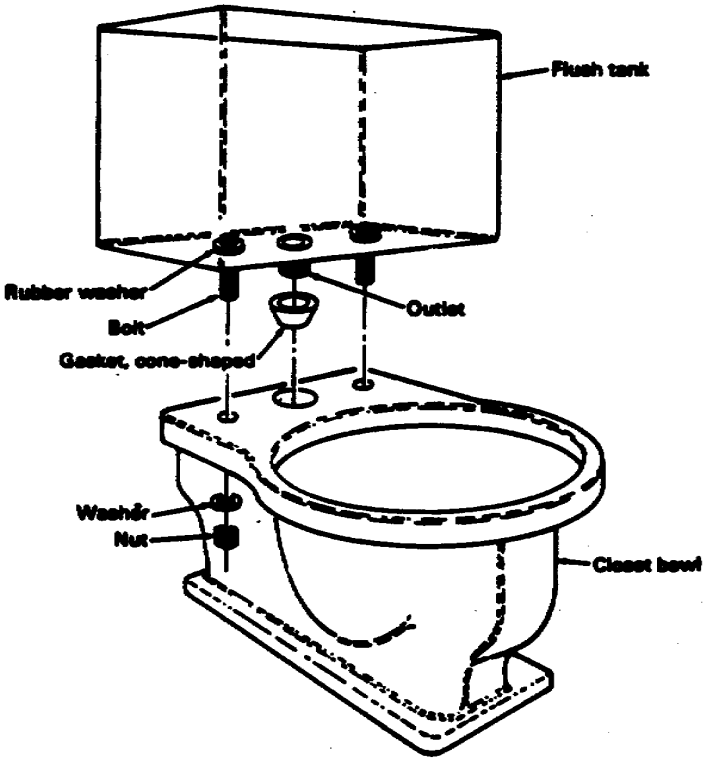

Solutions for this exercise are from 49.

2. Using the letters A through J, list the steps in the correct order to install a wall-mount flush tank with connections to closet bowl.

A. Slide rubber washer onto tank outlet connection.
B. Attach tank to wall with screw bolts. Make sure tank is level and lined up with bowl.
C. Place end of elbow against spud, and fasten slip-joint nut and hand-tight onto spud.
D. Using recommended height from manufacturer's instructions, install mounting board.
E. Install tank outlet connection and spud connection, following manufacturer's instructions.
F. Fasten slip-joint nut to tank's outlet connections.
G. Tighten slip-joint nuts with wrench.
H. Slide slip-joint nut and then metal friction ring onto closet elbow for hookup to spud.
I. Slide spud flange and rubber washer onto threaded spud.
J. Slide slip-joint nut and then metal friction ring onto closet elbow for hookup to tank outlet.

_____
_____
_____
_____
_____
_____
_____
_____
_____
_____

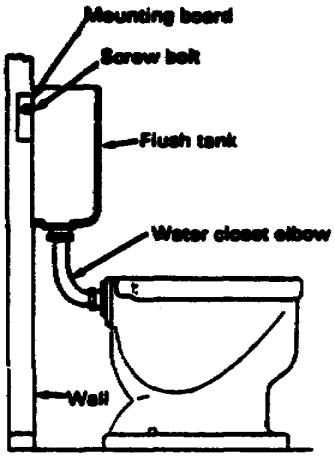

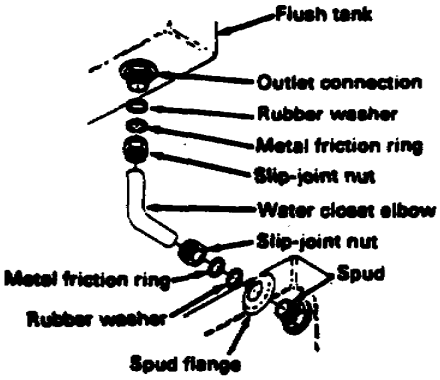

Solutions for this exercise are on page 49.

SELF-CHECK EXERCISE SOLUTIONS

1. C
   A
   D
   B
   E

2. D
   E
   I
   H
   C
   A
   J
   F
   B
   G

Learning Event 4:
INSTALLING FLUSHING MECHANISMS

A flush tank comes with an assortment of parts for its flushing mechanism. When these parts are connected, they form a mechanical flushing mechanism. Since there are several types of flushing mechanisms, always follow the manufacturer's instructions to install them (see Figure 26).

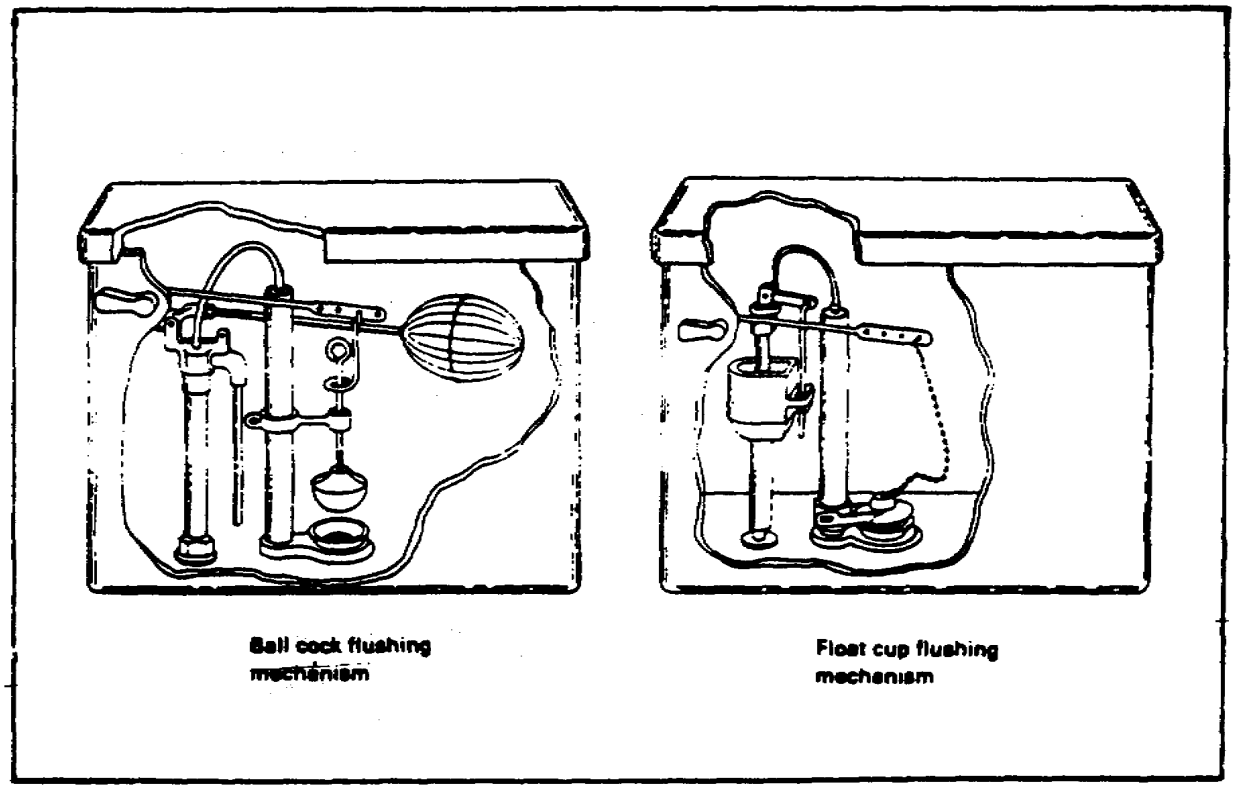

FIGURE 26. COMMON FLUSHING MECHANISMS

Installing a ball cock flushing mechanism. Use the following steps to install a ball cock flushing mechanism (see Figure 27):

Connect Douglas valve to tank's drain outlet.

Screw overflow pipe onto Douglas valve, if not attached.

Slide guide holder onto overflow pipe about halfway down, and tighten holder screw.

Install ball cock assembly into hole at left bottom of tank; then tighten locknut under tank.

Screw float rod into ball cock, and then screw ball float to other end of rod.

Attach overflow tube to ball cock and to overflow pipe.

Install operating handle with trip arm, and tighten handle's locknut.

Slide lift wire through loop of connecting wire.

Slide lift wire through guide holder, and screw flush ball onto threaded end of lift wire.

Attach connecting wire to trip arm.

NOTE: All adjustments are made on the flushing mechanism after water supply is connected.

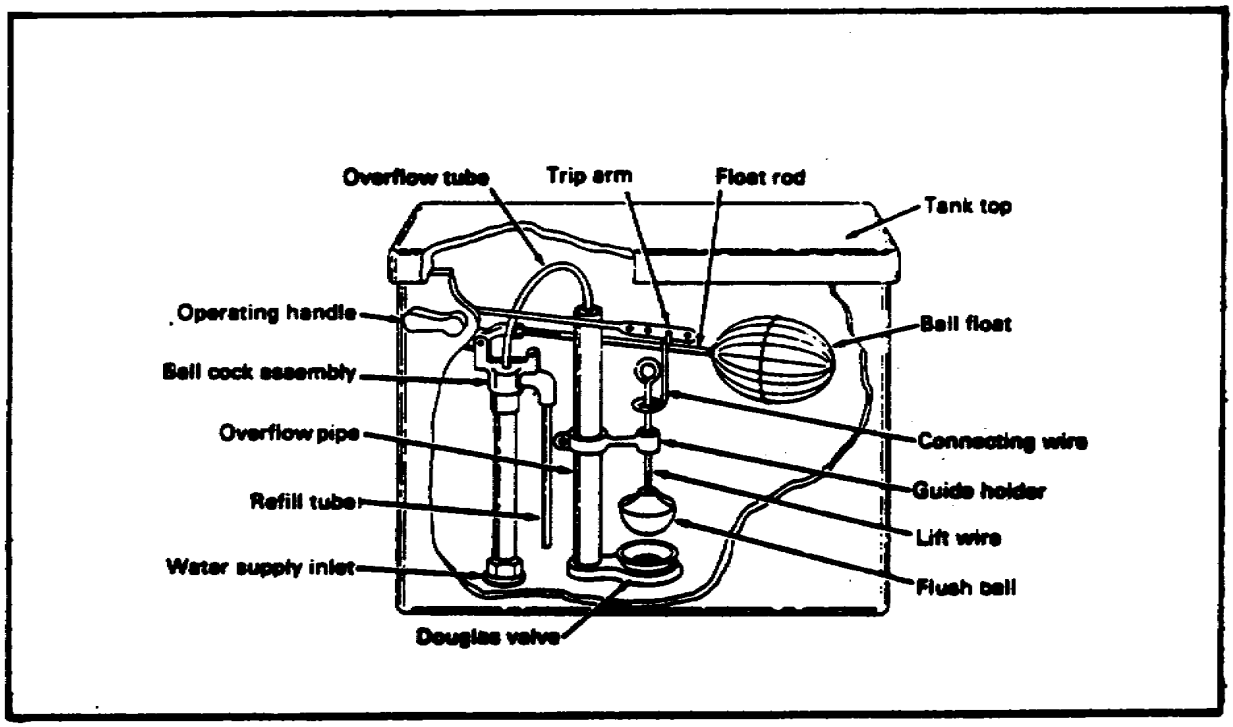

FIGURE 27. INSTALLING BALL COCK FLUSHING MECHANISM

Installing a plastic cup flushing mechanism. Use the following steps to install a plastic float cup flushing mechanism (see Figure 28):

Connect Douglas valve to tank's drain outlet.

Screw overflow pipe onto Douglas valve, if not attached.

Install float cup assembly into hole at left bottom of tank, and then tighten locknut under tank.

Slide guide holder with flapper ball onto the overflow pipe, and push it to the bottom of the overflow pipe.

Connect overflow tube to the float cup assembly and to the overflow pipe.

Install operating handle with trip arm, and tighten handle's locknut.

Connect chain to trip arm and flapper ball.

NOTE: All adjustments are made to the flushing mechanism after water supply is connected.

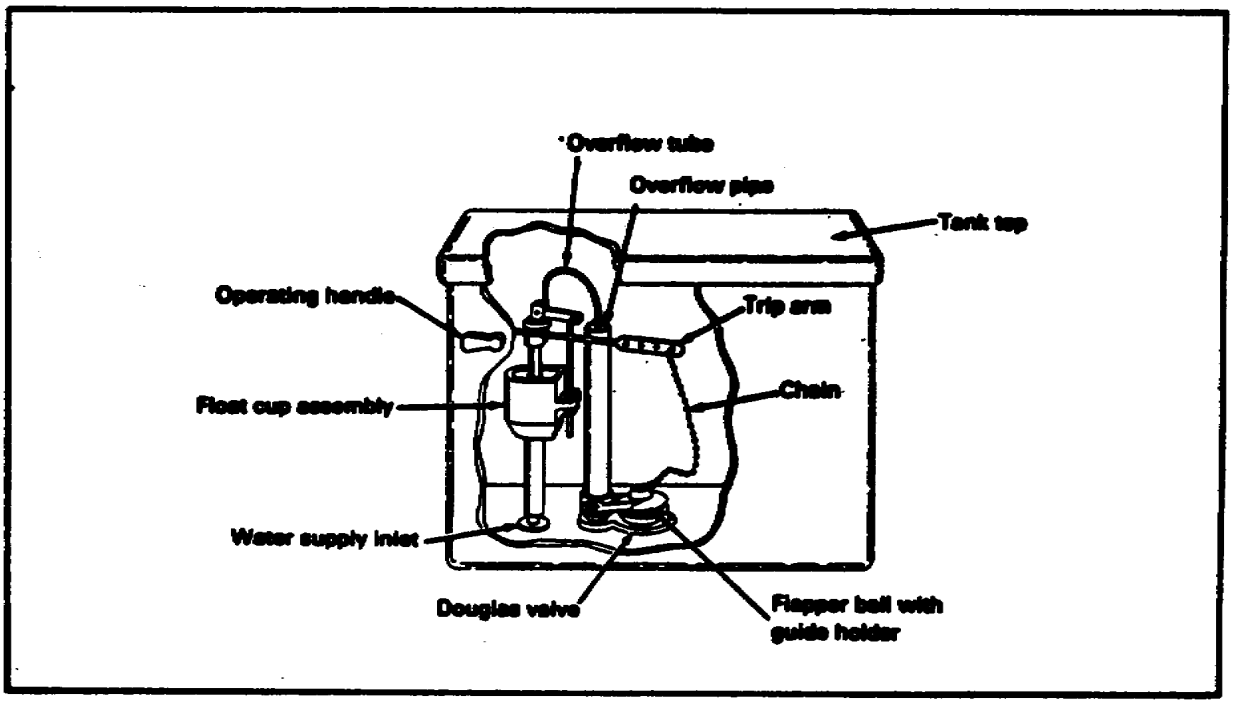

FIGURE 28. INSTALLING PLASTIC CUP FLUSHING MECHANISM

Learning Event 4
SELF-HECK EXERCISE

1. Identify the type of flushing mechanisms.
   A._____
   B._____

A.

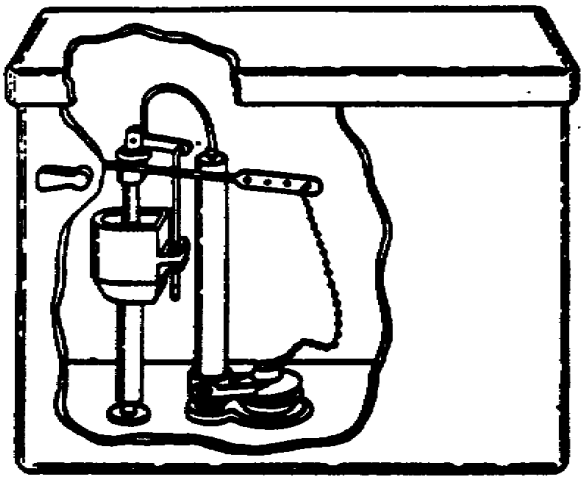

B.

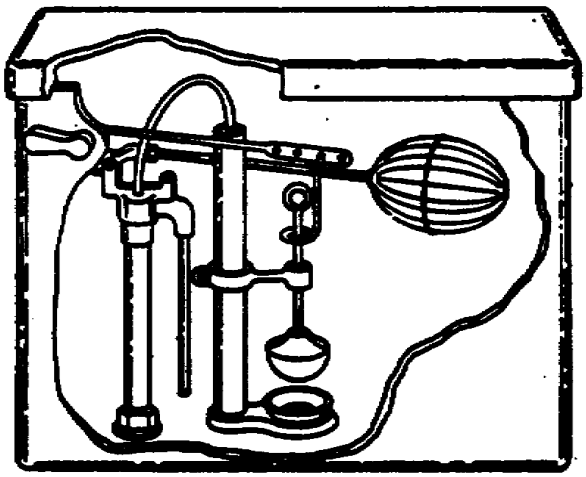

SELF-CHECK EXERCISE SOLUTIONS

1. A. Float (plastic) cup
   B. Ball cock

2. Using the letters A through J, list the steps in the correct order to install a ball cock flushing mechanism.

A. Screw float rod into ball cock, and then screw ball float to other end of rod.
B. Attach overflow tube to ball cock and to overflow pipe.
C. Install operating handle with trip arm, and tighten handle's locknut.
D. Slide lift wire through loop of connecting wire.
E. Slide the wire through guide holder, and screw flush ball onto threaded end of lift wire.
F. Install ball cock assembly into hole at left bottom of tank, and then tighten locknut under tank.
G. Slide guide holder onto overflow pipe about halfway down, and tighten holder screw.
H. Connect Douglas valve tank's drain outlet.
I. Attach connecting wire to trip arm.
J. Screw overflow pipe onto Douglas valve if not attached.

_____
_____
_____
_____
_____
_____
_____
_____
_____
_____

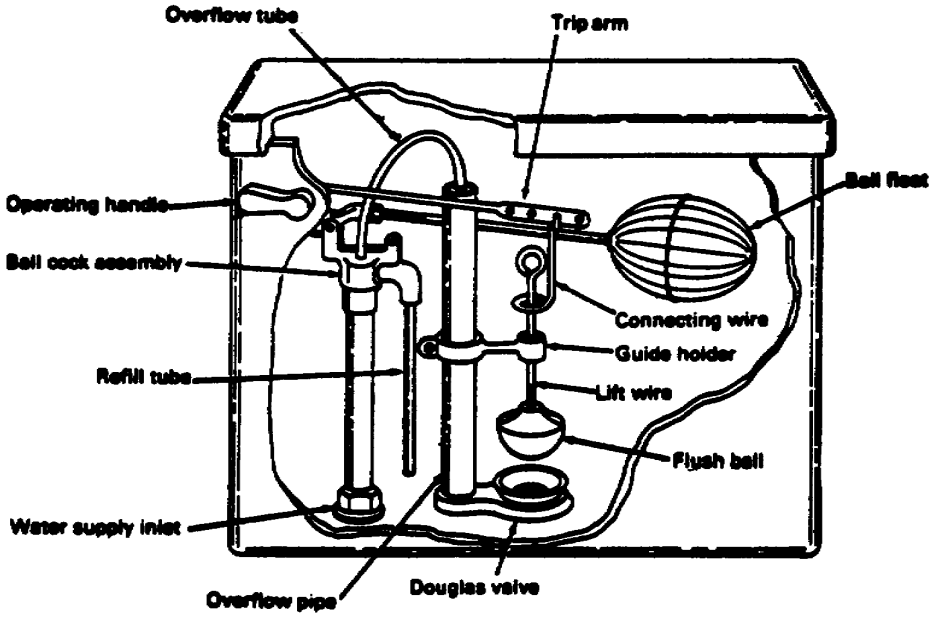

Solutions for this exercise are on page 55.

3. Using the letters A through G, list the steps in the correct order to install a float cup flushing mechanism.

A. Slide guide holder with flapper ball onto the overflow pipe. Push it to the bottom of the overflow pipe.
B. Connect overflow tube to the float cup assembly and to the overflow pipe.
C. Connect Douglas valve to tank's drain outlet.
D. Screw overflow pipe onto Douglas valve, if not attached.
E. Install float cup assembly into hole at left bottom of tank, and then tighten locknut under tank.
F. Install operating handle with trip arm, and tighten handle's locknut.
G. Connect chain to trip arm and flapper ball.

_____
_____
_____
_____
_____
_____
_____

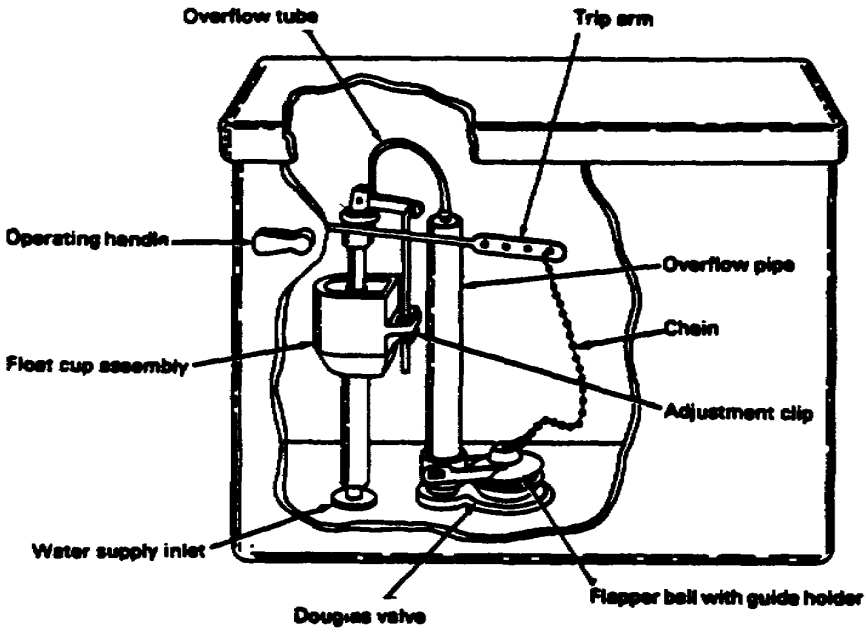

SELF-CHECK EXERCISE SOLUTIONS

2. H, J, G, F, A, B, C, D, E, I
3. C, D, E, A, B, F, G

Learning Event 5:
INSTALLING FLUSHOMETER

A flushometer is a valve that discharges a preset amount of water to flush a water closet. The flushometer can be either a diaphragm or a piston type of valve. The upper part of the flushometer connected to a water supply line fitting at the wall, and the lower part is connected to the top rear of the water closet bowl (see Figure 29).

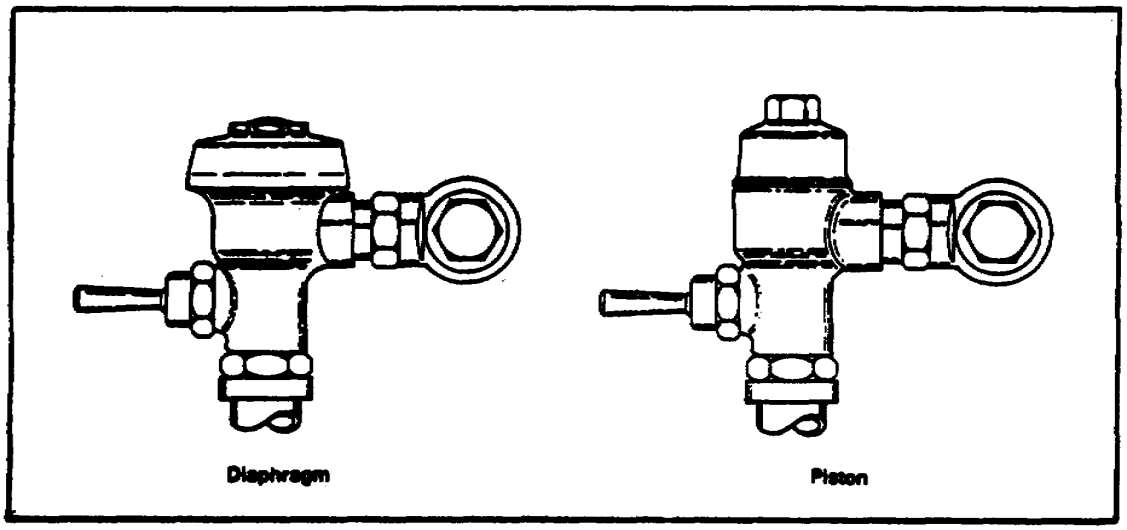

FIGURE 29. FLUSHOMETERS

NOTE: The following plumbing hardware should come with a flushometer for installation:

Spud coupling for closet bowl connection

Spud coupling for water pipe connection

Chrome flanges for wall and bowl

Installing a flushometer. Use the manufacturer's rough-in dimensions and instructions to install a flushometer. Once installed, turn on water supply and adjust flushometer valve's water flow. The following illustrations are examples of manufacturer's rough-in dimensions and instructions (see Figure 30):

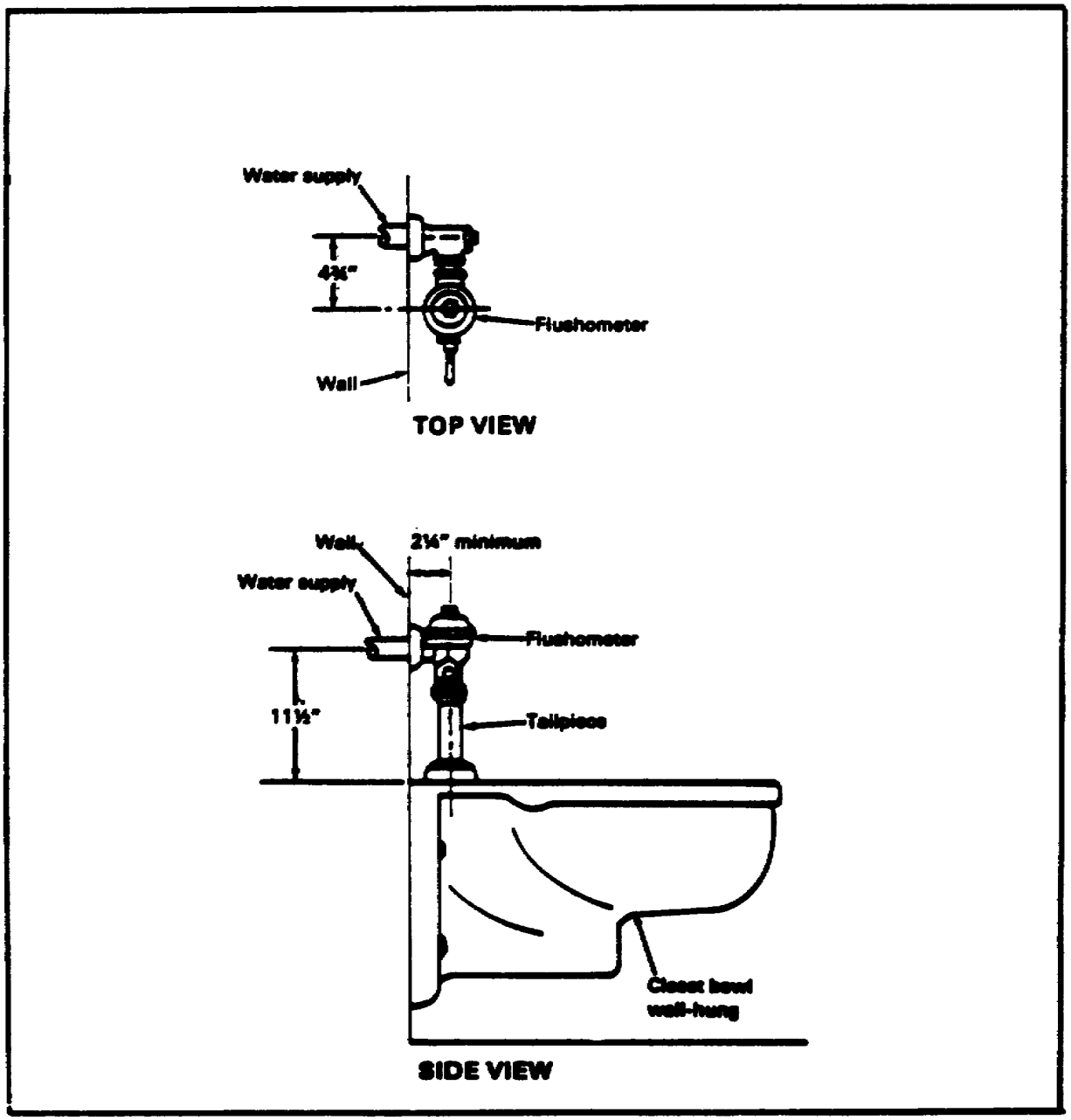

FIGURE 30. INSTALLING A FLUSHOMETER

Learning Event 5
SELF-CHECK EXERCISE

1. Identify each type of flushometer.
   A._____
   B._____

A.

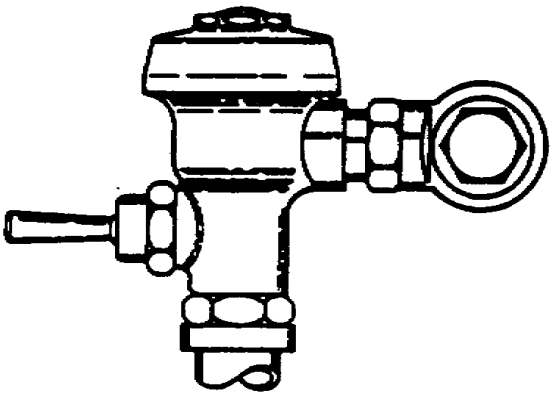

B.

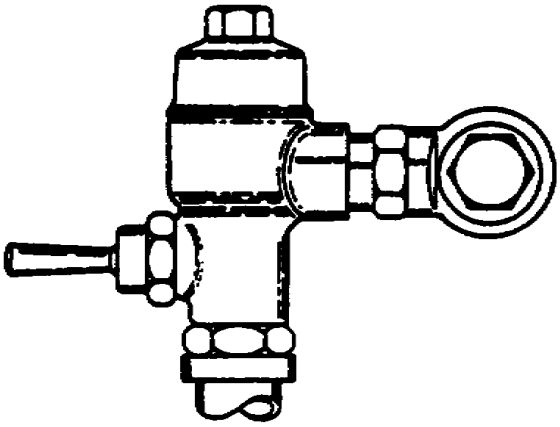

Fill in the blanks.

2. A flushometer is installed using the _____instructions.

3. The flushometer valve water flow is preset after _____.

SELF-CHECK EXERCISE SOLUTIONS

1. A. Diaphragm
   B. Piston
2. Manufacturer's
3. Installation

Learning Event 6:
INSTALLING WATER SERVICE

A water closet tank requires cold water supply service for flushing. The water supply is connected from the rough-in plumbing to a shutoff valve and from the shutoff valve to the tank's inlet.

Installing water service to a water closet tank. Use the following steps to install water service to a water closet tank (see Figure 31):

Slide escutcheon onto pipe, and push it against the wall.

Attach shutoff angle valve, making the proper connection for the type of pipe used. Make sure connection is tight and valve's other opening points straight up to tank.

With a spring bender, bend the flexible tube connector to a fitting position.

Slide tank connection coupling nut, valve connection coupling nut, and compression ring, in that order, onto the flexible tube connector.

Attach coupling nut to shutoff valve and tighten.

Attach coupling nut to tank inlet and tighten.

Set shutoff valve in closed position.

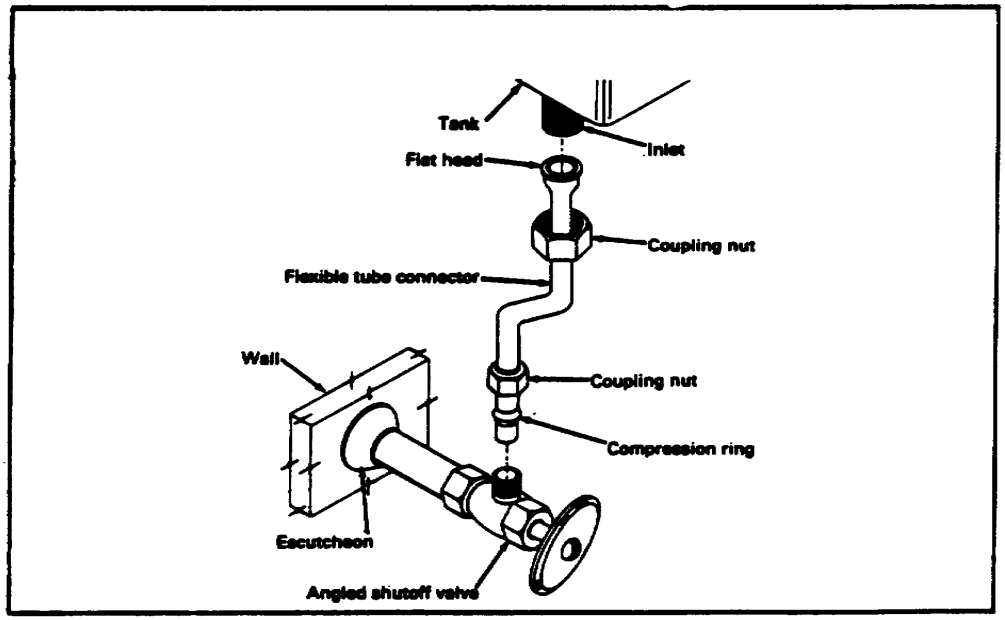

FIGURE 31. INSTALLING WATER SERVICE TO WATER CLOSET TANK

Installing water service through floor. Use a straight shutoff valve when the water service pipe comes up through the floor.

Learning Event 6
SELF-CHECK EXERCISE

Using the letters A through G, list the steps in the correct order to install water closet tank.

A. Slide tank connection coupling nut, valve connection coupling nut, and compression ring, in that order, onto the flexible tube connector.
B. Slide escutcheon onto pipe, and push it against the wall.
C. Attach shutoff angle valve, making the proper connection for the type of pipe used. Make sure connection is tight and valve's other opening points straight to tank.
D. With a spring bender, bend the flexible tube connector to a fitting position.
E. Attach coupling nut to shutoff valve and tighten.
F. Attach coupling nut to tank inlet and tighten.
G. Set shutoff valve in close position.

_____
_____
_____
_____
_____
_____
_____

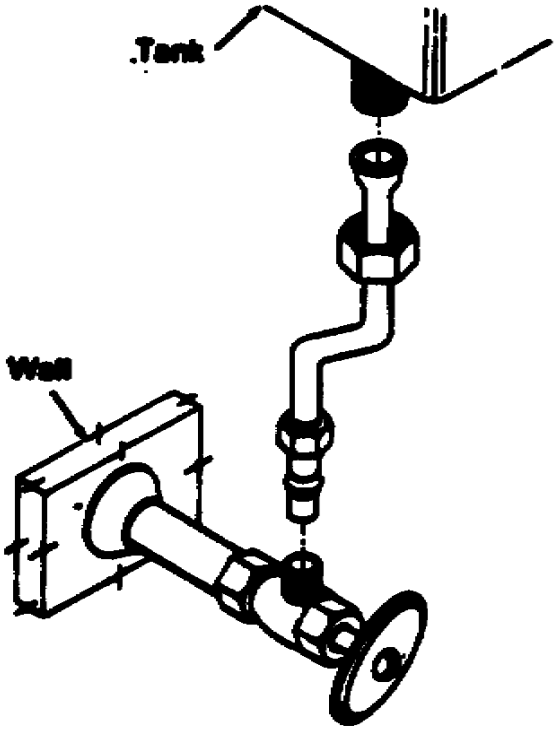

SELF-CHECK EXERCISE SOLUTIONS

B, C, D, A, E, F, G

Learning Event 7:
ADJUSTING FLUSHING MECHANISMS

The water closet is now installed with water and water connections. Turn on water supply, and open shutoff valve for water flow into the flush tank. Flush the tank several times to check the height of the water level in the flush tank. The water level should be about 1 inch below the top of the overflow pipe.

Adjustments for ball cock type flushing mechanism. Use the following steps to adjust a ball cock type flushing mechanism (see Figure 32):

For incomplete or erratic flushing, adjust handle and trip arm, connecting wire, lift wire, guide holder, and flush ball.

Adjust water level by bending the ball float rod.

After adjustments are made, flush the tank several times, observing operation.

Then place top on flush tank.

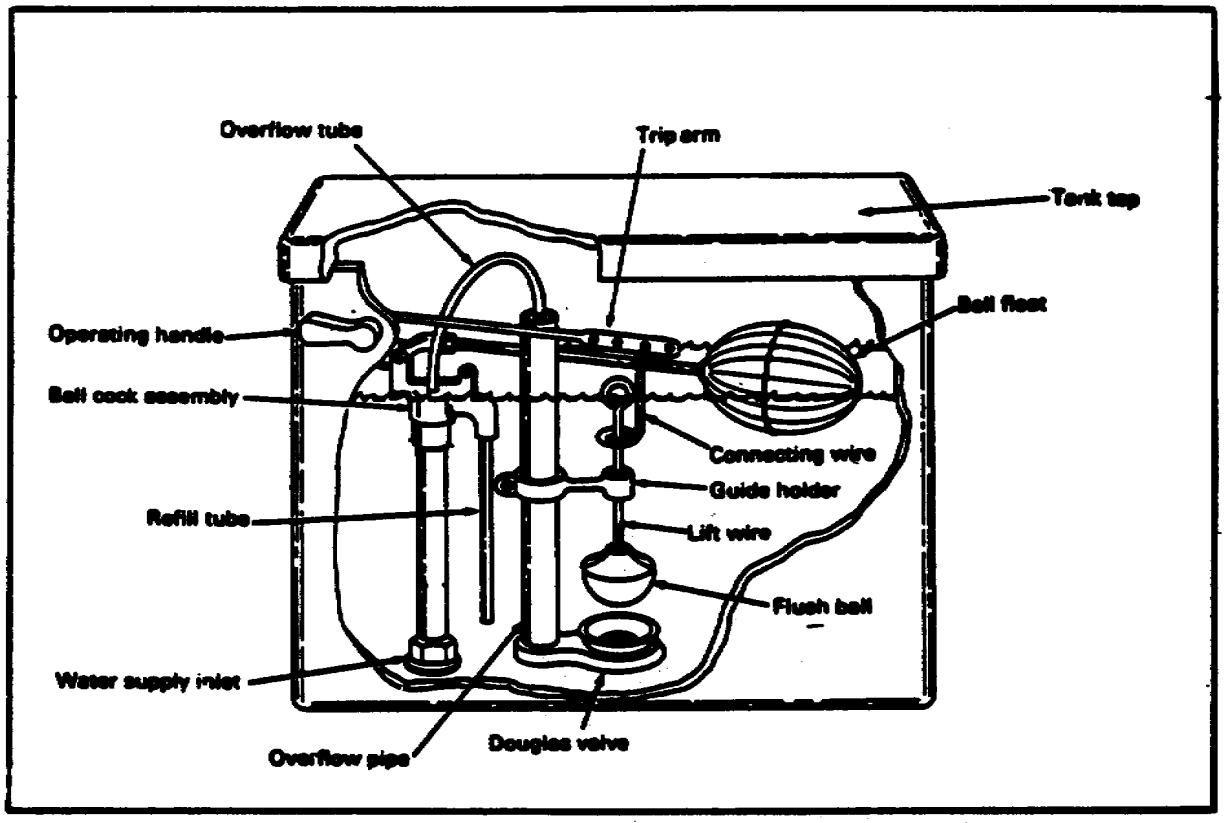

FIGURE 32. ADJUSTING BALL COCK MECHANISM

Adjustments for a plastic float cup flushing mechanism. Use the following steps to adjust a plastic float cup flushing mechanism (see Figure 33):

For incomplete or erratic flushing, adjust handle and tip arm, chain, and flapper ball with guide holder.

Adjust water level by moving adjustment clip up or down on the pull rod.

After adjustments are made, flush the tank several times, observing operation.

Then place top on flush tank.

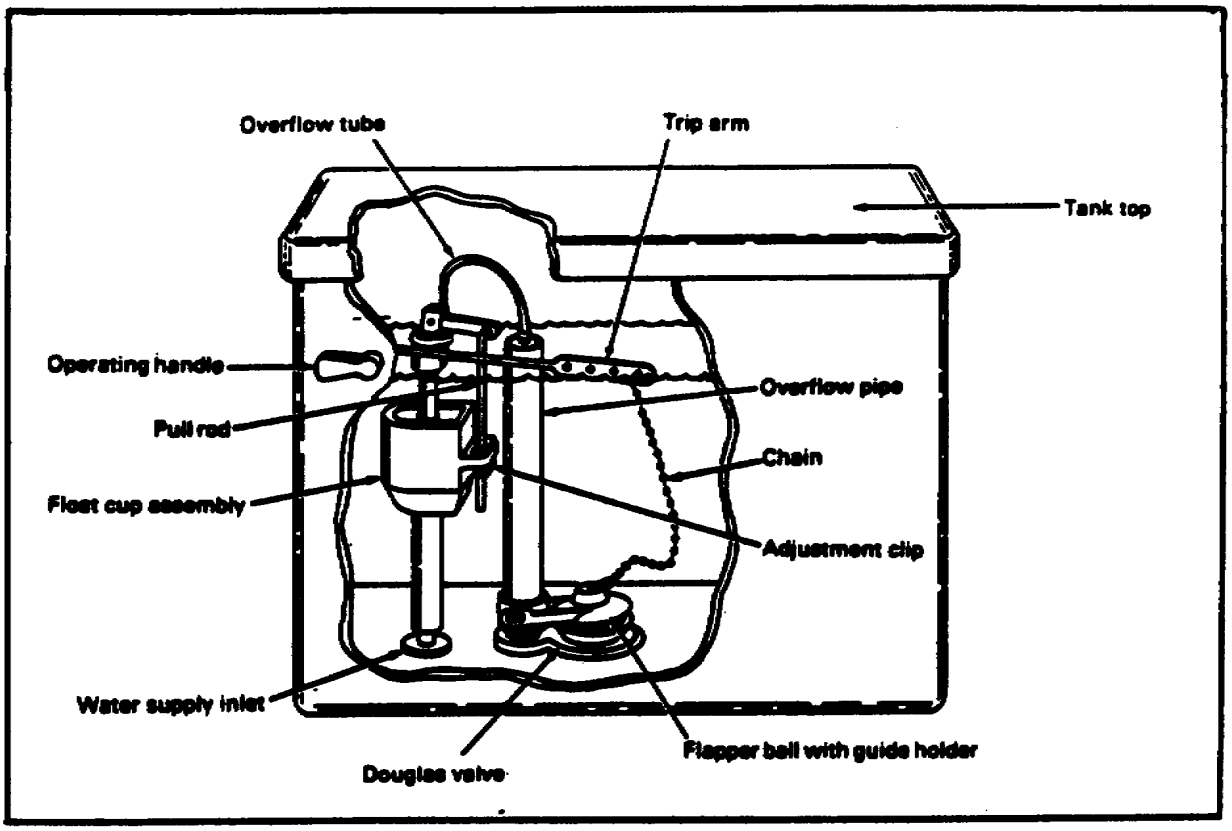

FIGURE 33. ADJUSTING PLASTIC FLOAT CUP MECHANISM

Learning Event 7
SELF-CHECK EXERCISE

Fill in the banks.

1. Flush the tank several times to check the height of the_____in the flush tank.

2. The water level in the flush tank should be about_____below the top of the overflow pipe.

3. The water level on a ball cock type flushing mechanism is adjusted by _____the ball float rod.

4. The water level on a plastic float cup type flushing mechanism is adjusted by moving the_____up down on the pull rod.

SELF-CHECK EXERCISE SOLUTIONS

1. Water level
2. 1 inch
3. Bending
4. Adjustment clip

Learning Event 8
INSTALLING THE SEATS

The last item to be installed on a water closet is the seat. The seat is connected to the water closet bowl with washers and locknuts.

Installing the seat. Use the following steps to install the seat (see Figure 34):

Set seat's bolts through bowl's holes.

Slide washer over bolts, and screw locknuts on hand-tight.

Line up seat on bowl, and tighten locknuts with a wrench.

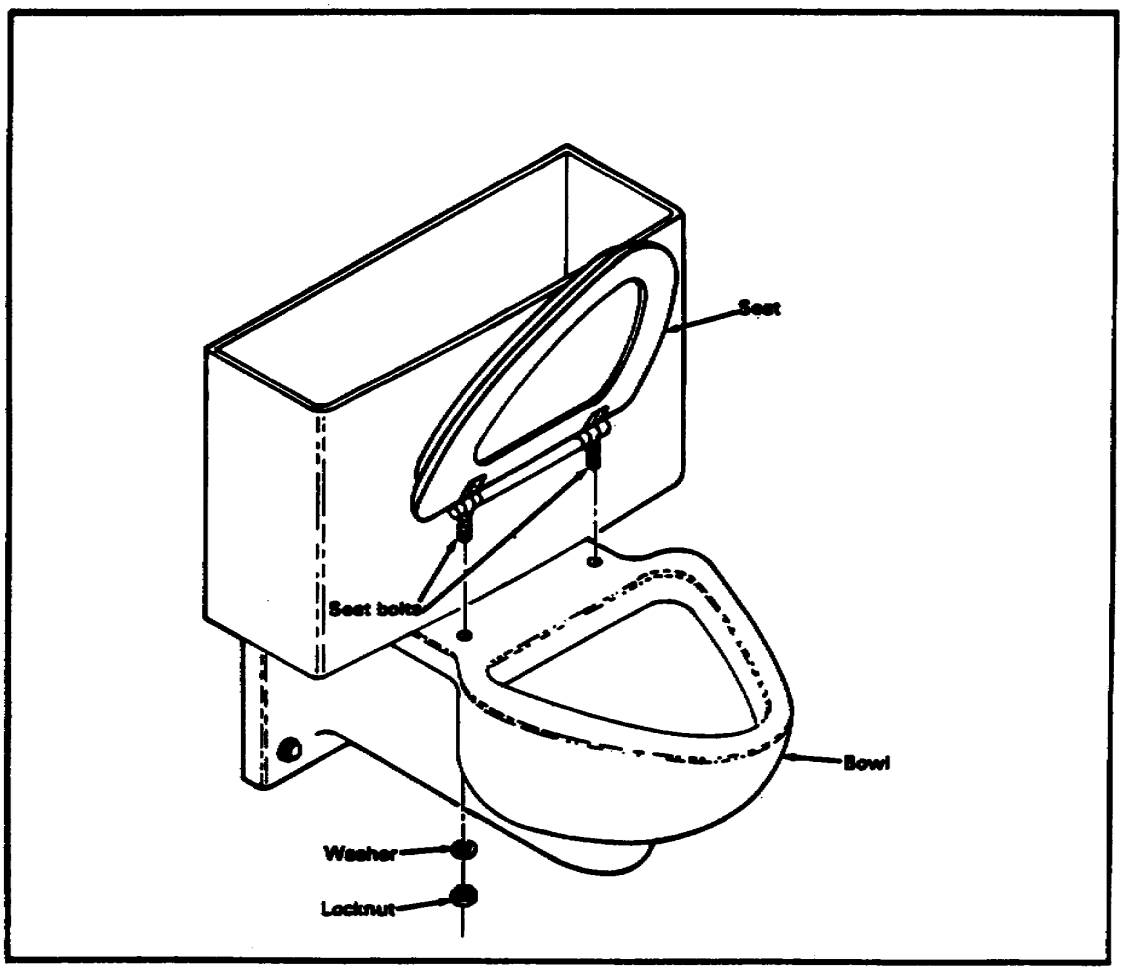

FIGURE 34. INSTALLING WATER CLOSET SEAT

Learning Event 8
SELF-CHECK EXERCISE

Fill in the blanks with your responses.

The seat is connected to the water closet with _____ and _____.

SELF-CHECK EXERCISE SOLUTIONS

Washers, locknuts

Lesson 2
REVIEW EXERCISE

Check your understanding of Lesson 2 by completing this review exercise. Try to complete all of the questions without looking back at the lesson. When you are finished, turn to the solutions at the end of the lesson and check your responses. If you missed any, go back and restudy the place in the lesson where the information is given.

1. Identify the two types of water closets with flush tanks.
   A._____
   B._____

A.

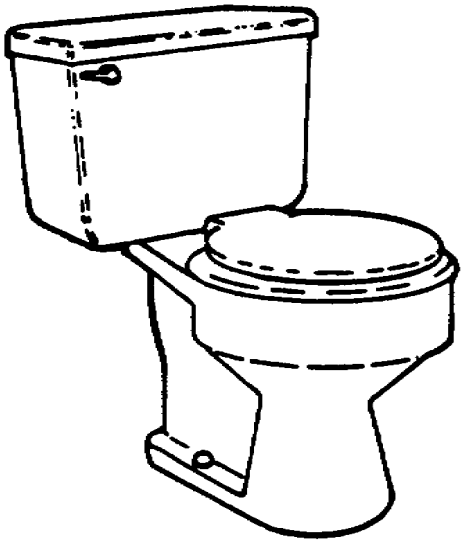

B.

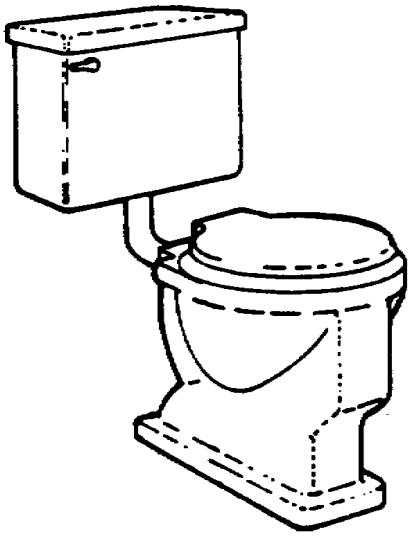

2. What is placed on a finished floor for installing a water closet?

   A. Closet bend
   B. Closet bowl
   C. Closet flange
   D. Closet bolts

3. A wax gasket is pressed evenly over the_____on the bottom of the closet bowl.

4. A thick layer of putty is placed around the outer_____on the bottom of the closet bowl.

5. When the closet bowl is bolted onto the flange, it must be_____.

Solutions for this exercise are on page 71.

6. Using the letters A through E, list the steps in the correct order to install a close-coupled flush tank to the bowl.

A. At the bowl, slide washer onto bolt, and fasten the nut onto the bolt on each side.
B. Tighten nuts with a wrench to seat cone-shaped gasket and tank on bowl.
C. Slip a rubber washer on each bolt and, from inside the tank, place the bolts with washers through the holes.
D. Push cone-shaped gasket onto tank outlet.
E. With bolt holes lined up, place tank on bowl.

_____
_____
_____
_____
_____

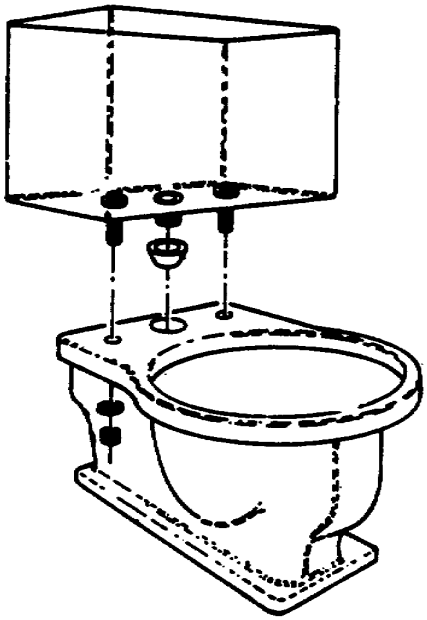

Solutions for this exercise are on page 71

7. Identify the two types of flushing mechanisms.
   A._____
   B._____

A. **B.**

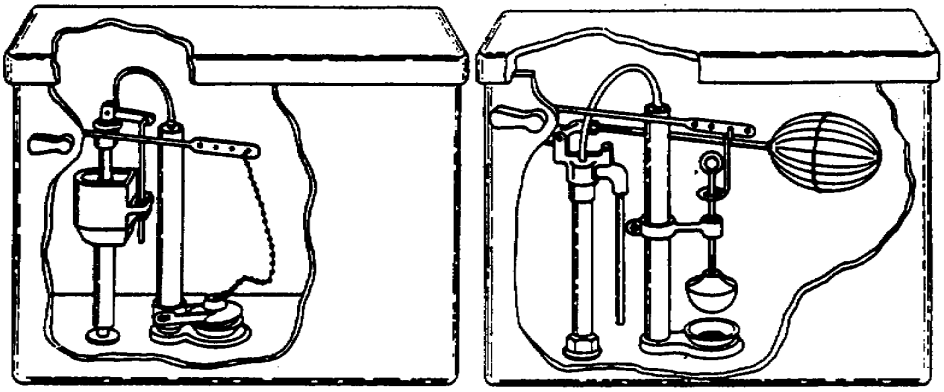

8. Using the letters A through J, list the steps in the correct order to install a ball cock type flushing mechanism in a flush tank.

A. Screw float rod into ball cock, and then screw ball float to other end of rod.
B. Attach overflow tube to ball cock and to overflow pipe.
C. Install operating handle with trip arm, and tighten handle's locknut.
D. Slide lift wire through loop of connecting wire.
E. Slide the wire through guide holder, and screw flush ball onto threaded end of lift wire.
F. Install ball cock assembly into hole at left bottom of tank, and then tighten locknut under tank.
G. Slide guide holder onto overflow pipe about halfway down, and tighten holder screw.
H. Connect Douglas valve to tank's drain outlet.
I. Attach connecting wire to trip arm.
J. Screw overflow pipe onto Douglas valve if not attached.

_____
_____
_____
_____
_____
_____
_____
_____
_____
_____

Solutions for this exercise are on page 71.

9. Identify the two types of flushometer valves.
   A._____
   B._____

A.

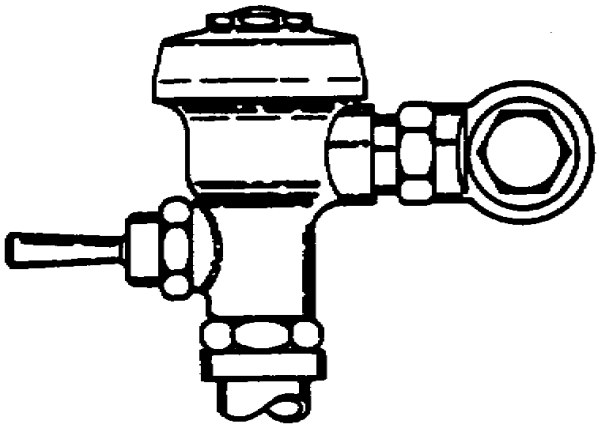

B.

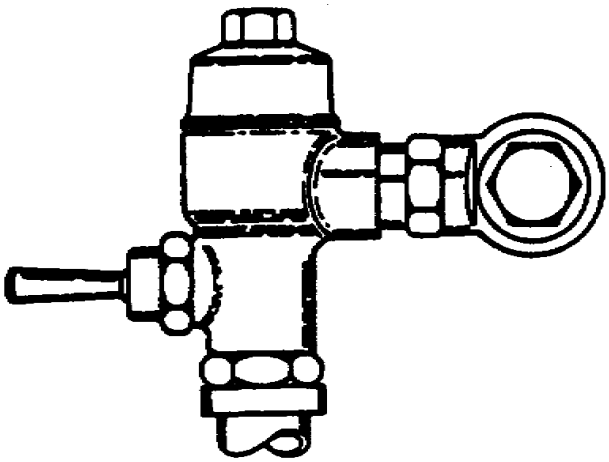

10. A flushometer valve is installed using the _____ instructions.

Solutions for this exercise are on page 71.

11. Using the letters A through G, list the steps in the correct order to install water supply service to a flush tank.

A. Attach coupling nut to shutoff valve and tighten.
B. Attach coupling nut to tank inlet and tighten.
C. Set shutoff valve in close position.
D. Attach shutoff angle valve, making the proper connection for the of pipe used. Make sure connection is tight and valve's other opening points straight up to tank.
E. With a spring bender, bend flexible to connector to a fitting position.
F. Side escutcheon on pipe, and push it against the wall.
G. Slide tank connection coupling nut, valve connection coupling nut, and compression ring, in that order, onto the flexible tube connector.

_____
_____
_____
_____
_____
_____
_____

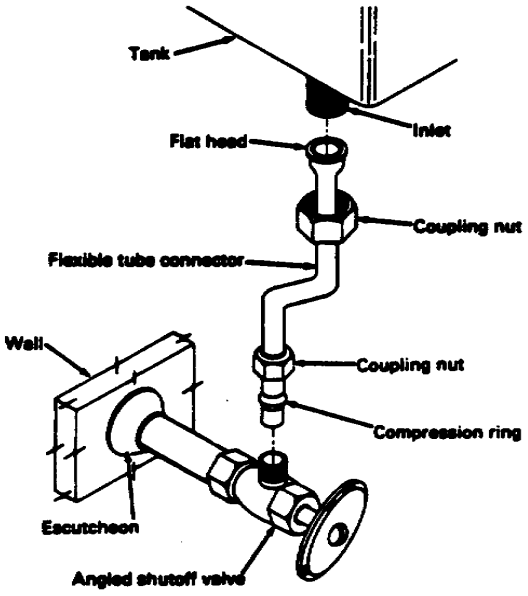

12. The water level in a flush tank should be about _____ below the top of the overflow pipe.

Solutions for this exercise are on page 71.

REVIEW EXERCISE SOLUTIONS

1. A. Close-coupled (Page 38)
   B. Wall-hung
2. C (Page 40)
3. Horn (Page 41)
4. Base (Page 41)
5. Level (Page 42)
6. D (Page 45)
   E
   C
   A
   B
7. A. float cup (Page 50)
   B. Ball cock
8. H (Pages 50-51)
   J
   G
   F
   A
   B
   C
   D
   E
   I
9. A. Diaphragm (Page 56)
   B. Piston
10. Manufacturer's (Page 57)
11. F (Page 59)
    D
    E
    G
    A
    B
    C
12. 1 inch (page 61)

Lesson 3
INSTALLATION OF URINALS

OBJECTIVE
At the end of this lesson you will be able to describe the procedures to install urinals.

TASK
Task No. 051-248-1010, Install urinals.

CONDITIONS
Given subcourse booklet number EN5113 and an examination response sheet. You will work at your own pace and in your own selected environment with no supervision.

STANDARDS
Within approximately 4 hours, you should be able to study the lesson resources, answer the review exercises, and select the correct response for each examination question. You must respond correctly to 80% of the examination questions in order to receive credit for this subcourse.

CREDIT HOURS
4

REFERENCES
FM 5-51K
TM 5-551K

Lesson 3
INSTALLATION OF URINALS

Learning Event 1:
IDENTIFYING URINALS

A urinal is a fixture flushed with water whose liquid waste drains into the building's waste system. Urinals come in many shapes and sizes that are wall or floor-mounted. They are made of vitreous china or enameled cast iron. The flushing mechanism for most urinals is a flushometer-type valve. Four types of urinals are illustrated below (see Figure 35).

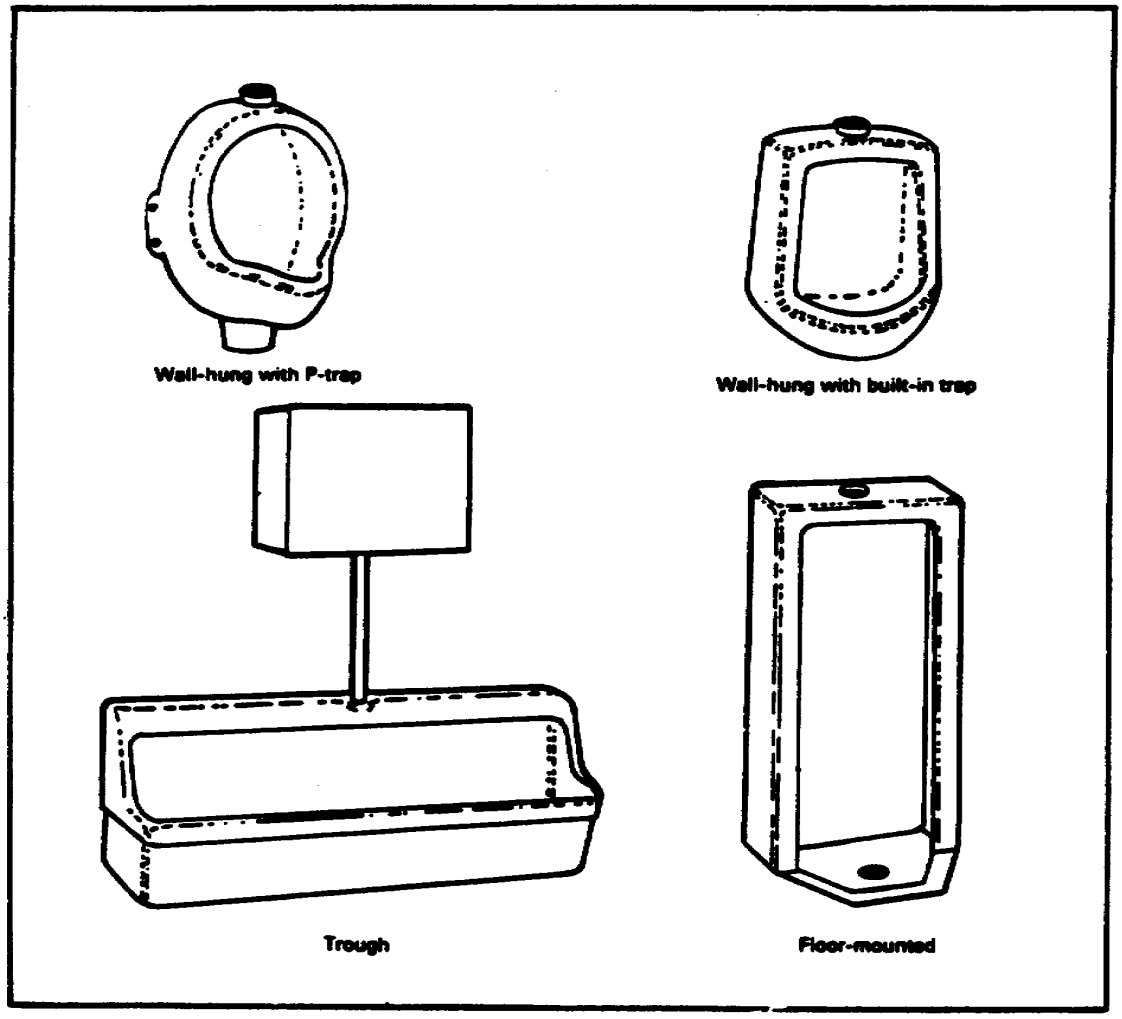

FIGURE 36. URINALS

Types of flushometers for urinals. The diaphragm type flushometer valve is mainly used to flush urinals. A piston type flushometer can also be used (see Figure 36).

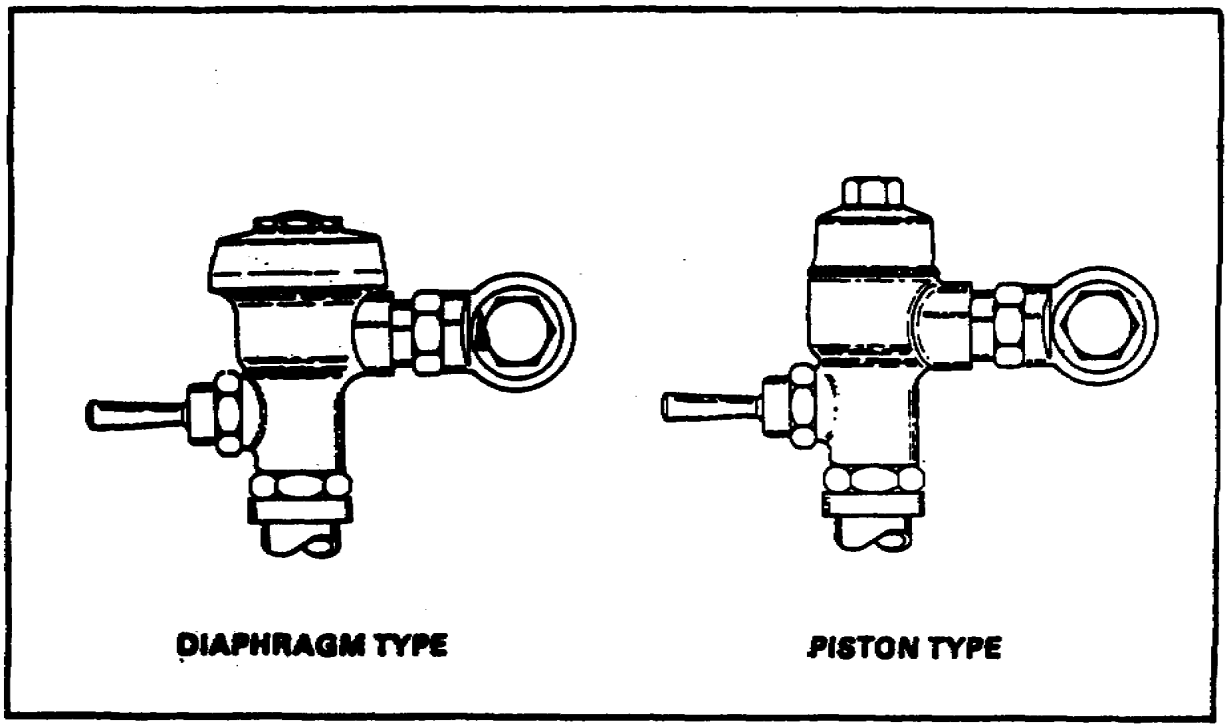

FIGURE 36. FLUSHOMETERS

Learning Event 1
SELF-CHECK EXERCISE

1. Identify each type of urinal.
   A._____
   B._____
   C._____
   D._____

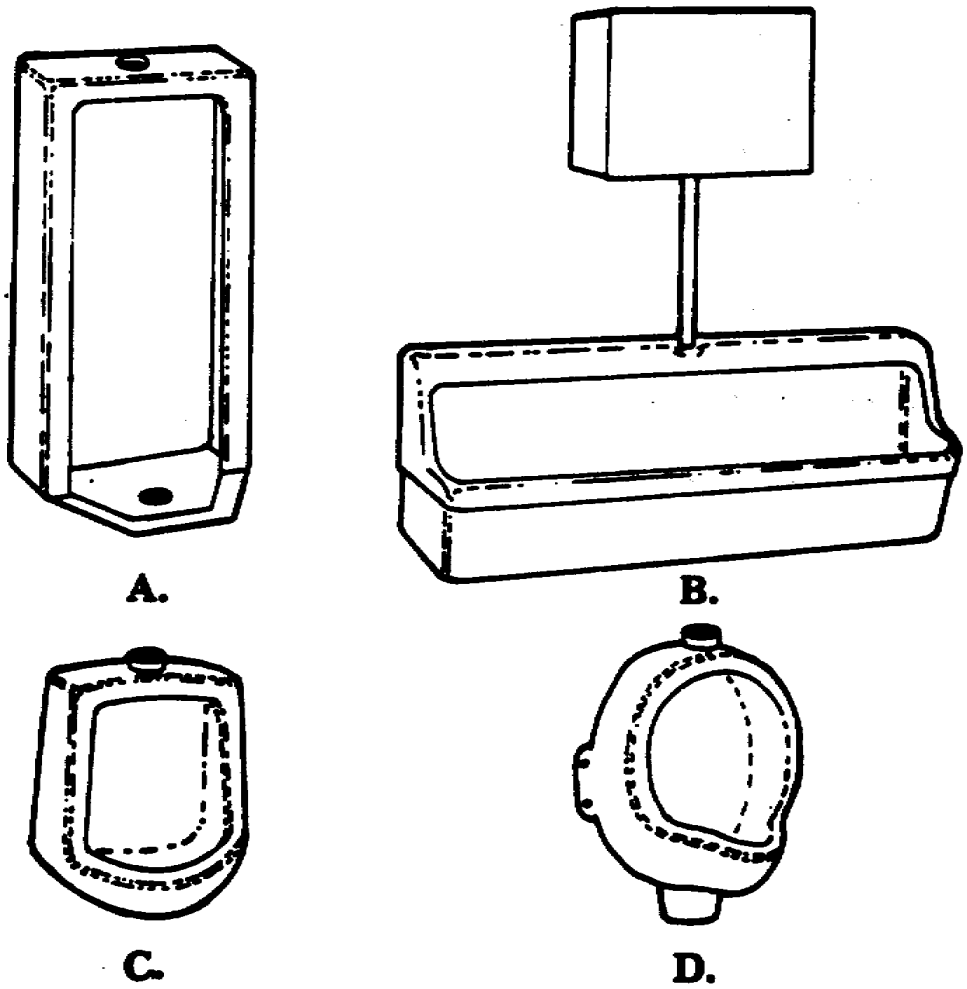

Solutions for this exercise are on page 76.

2. Which flushometer valve, A or B, is mainly used to flush urinals?

_____

A.

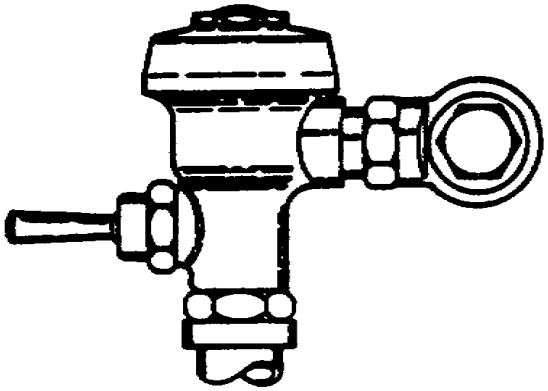

B.

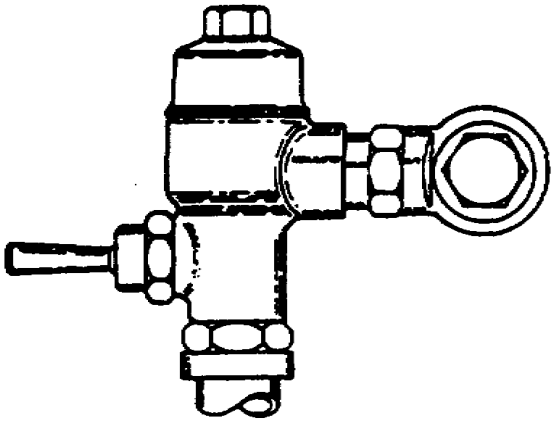

SELF-CHECK EXERCISE SOLUTIONS

1. A. Floor-mounted
   B. Trough
   C. Wall-hung
   D. Wall-hung with P-trap
2. A

Learning Event 2:
INSTALLING WALL-HUNG URINALS

To install a wall-hung urinal, you need a mounting board to place between the wall studs for support and the manufacturer's rough-in specifications for the urinal. The rough-in specifications determine the height from the floor to install the mounting board between the studs. The mounting board is installed before the studs are covered with a finished wall (see Figure 37).

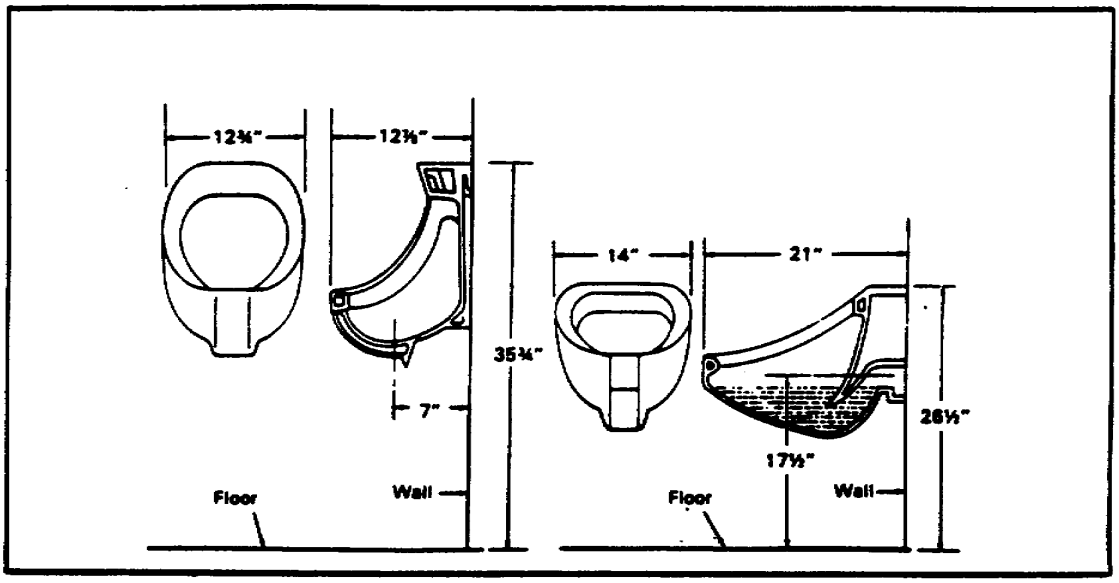

FIGURE 37. MANUFACTURER'S SPECIFICATIONS

A wall-hung urinal is fastened with screws or bolts to a mounting board behind the finished wall. Make sure the urinal is set in a level position (see Figure 38).

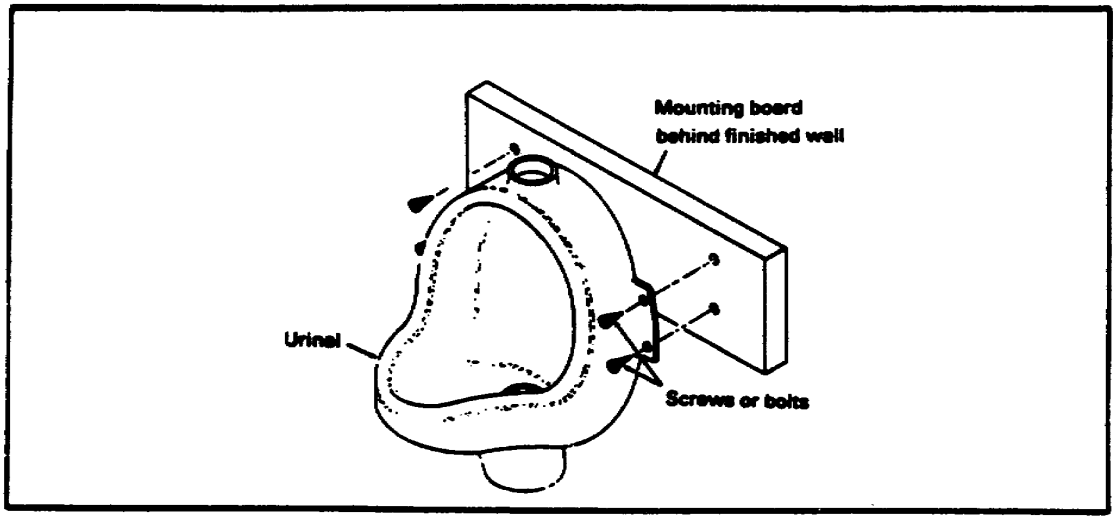

FIGURE 38. ATTACHING WALL-HUNG URINAL TO WALL

Learning Event 2
SELF-CHECK EXERCISE

Fill in the blanks.

1. Installing a wall-hung urinal requires a _____and the _____rough-in specifications.
2. The height from the top of the urinal to the floor is given in the _____rough-in specifications.
3. The urinal must be _____when installed.

SELF-CHECK EXERCISE SOLUTIONS

1. Mounting board, manufacturer's
2. Manufacturer's
3. Level

Learning Event 3:
ATTACHING DRAIN OUTLETS

The drain outlet attachment for the urinal is the first step to install the urinal's drain attachment. The assembled parts of the drain outlet form the drain outlet attachment. Use the following steps to install the urinal's drain attachment (see Figure 39):

Place threaded spud housing, threads down, into urinal's drain outlet.

Slide rubber gasket onto spud housing through the drain outlet.

Slide metal washer onto spud housing.

Screw locknut onto spud housing, and tighten with a wrench.

Slide rubber washer, and then slip nut onto tailpiece.

Place tailpiece against spud housing, and screw slip nut hand-tight onto spud housing.

Tighten slip nut with a wrench.

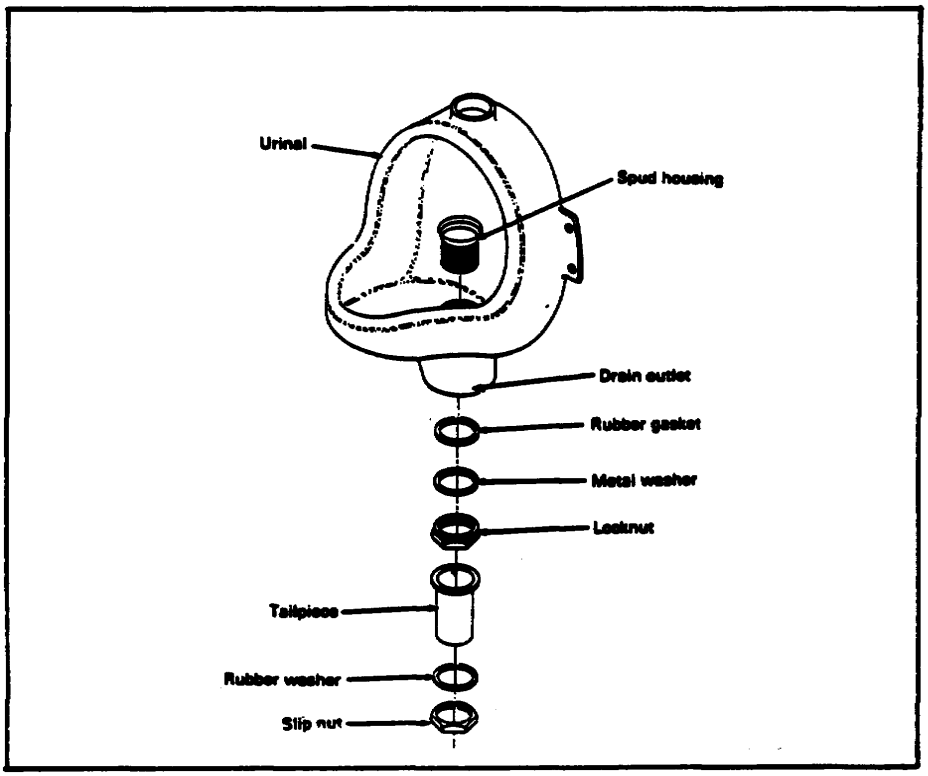

FIGURE 39. INSTALLING URINAL DRAIN OUTLET

SELF-CHECK EXERCISE

Using the letters A through G, list the steps in the correct order to install the urinal's drain outlet attachment.

A. Screw locknut onto spud housing, and tighten with a wrench.
B. Slide rubber washer, and then slip nut onto tailpiece.
C. Place tail piece against spud housing, and screw slip nut hand-tight onto spud housing.
D. Tighten slip nut with a wrench.
E. Place threaded spud housing, threads down, into urinal's drain outlet.
F. Slide rubber gasket onto spud housing through the drain outlet.
G. Slide metal washer onto spud housing.

_____
_____
_____
_____
_____
_____
_____

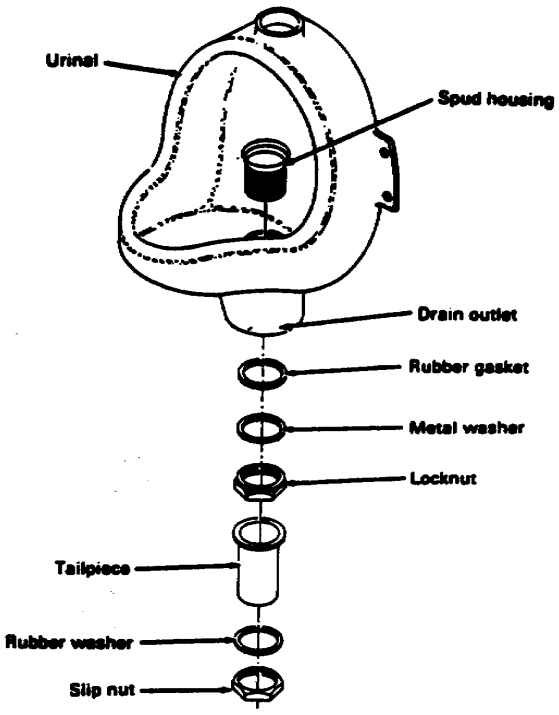

SELF-CHECK EXERCISE SOLUTIONS

E, F, G, A, B, C, D

Learning Event 4:

CONNECTING P-TRAPS TO URINALS

A urinal's waste connection is from the tailpiece to the rough-in plumbing. The connection is made by using a U-shaped trap, a drainpipe with a curved end, rubber washers, and slip nuts. Use the following steps to connect the urinal's P-trap (see Figure 40):

Slide escutcheon, slip nut, and rubber washer over the straight end of the drainpipe.

Slide straight end of drainpipe into rough-in plumbing.

Fasten slip nut hand-tight to rough-in plumbing.

Slide slip nut and then rubber washers over curved end of drainpipe and tailpiece.

Slide trap's lowest end onto drainpipe and highest end onto tailpiece.

Fasten slip nuts hand-tight on trap.

Line up the connections, and tighten all slip nuts.

Slide escutcheon against the wall.

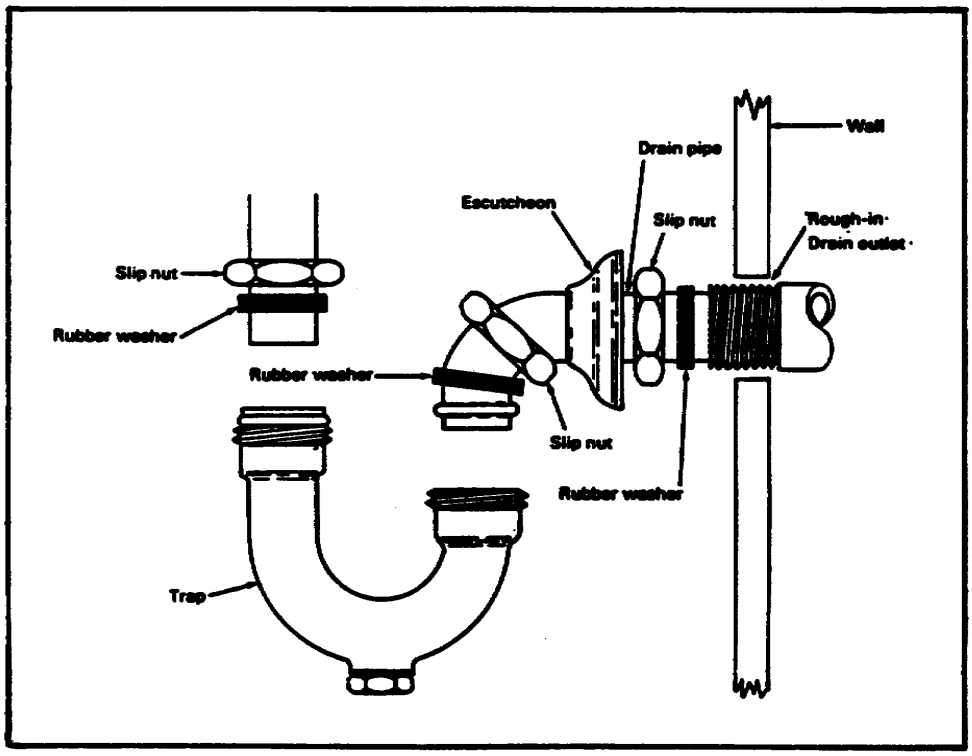

FIGURE 40. CONNECTING P-TRAP TO URINAL

SELF-CHECK EXERCISE

Using the letters A through H, list the steps in the correct order to install a P-trap to the urinal.

A. Slide trap's lowest end onto drainpipe and highest end onto tailpipe.
B. Fasten slip nuts hand-tight on trap.
C. Slide escutcheon, slip nut, and rubber washer over the straight end of the drainpipe.
D. Slide straight end of drainpipe into rough-in plumbing.
E. Line up the connections, and tighten all slip nuts.
F. Slide escutcheon against the wall.
G. Fasten slip nut hand-tight onto rough-in plumbing.
H. Slide slip nuts and then rubber washers over curved end of drainpipe and tailpiece.

_____
_____
_____
_____
_____
_____
_____
_____

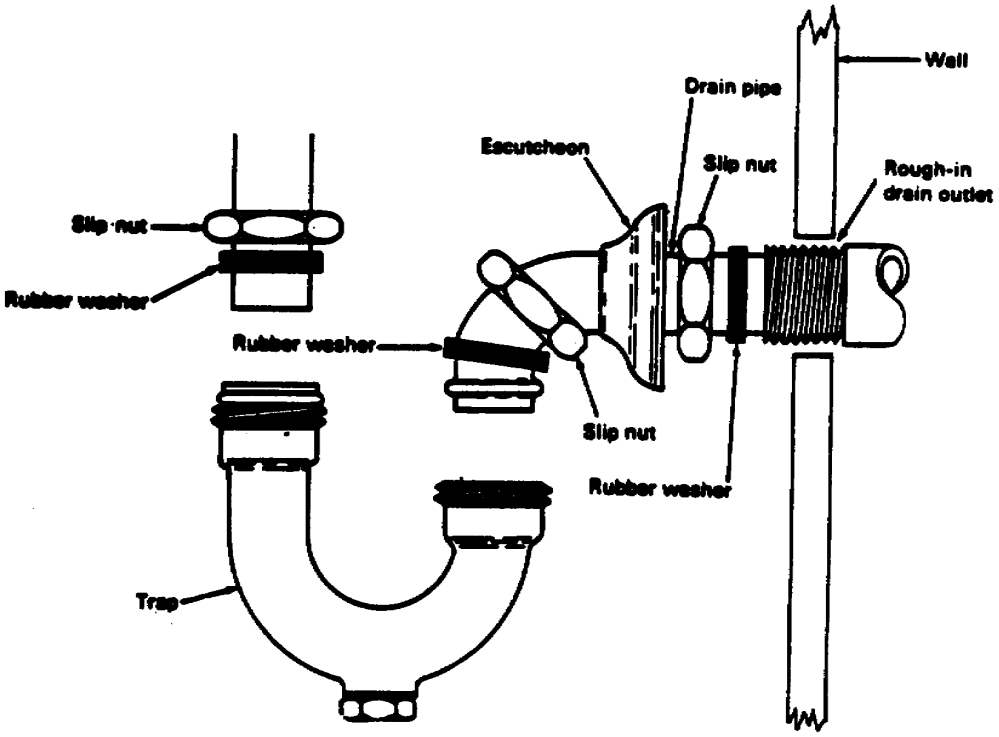

SELF-CHECK EXERCISE SOLUTIONS

C
D
G
H
A
B
E
F

Learning Event 5:
INSTALLING FLUSHOMETERS

Cold water service for flushing a urinal is made with a flushometer. The flushometer is attached to a cold water supply line and then connected to the top of the urinal by assembling a group of plumbing parts.

Installing urinal's water inlet connection. Use the following steps to install the urinal's water inlet connection (see Figure 41):

Slide spud housing with threads up into water inlet hole.

Slide rubber gasket and metal washer onto spud housing, pushing the beveled end into the water inlet hole.

Screw locknut onto spud housing, and tighten nut.

Slide cover over threads of spud housing.

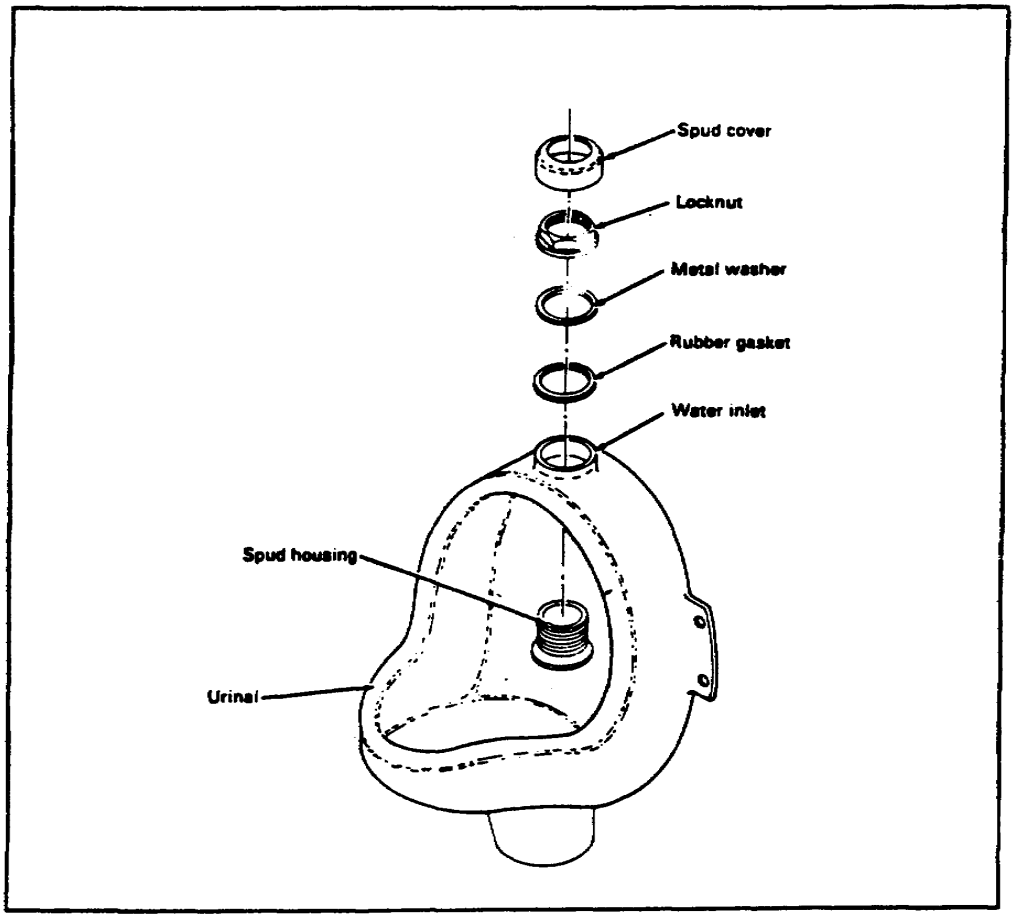

FIGURE 41. INSTALLING WATER INLET CONNECTION TO URINAL BOWL

Installing the flushometer for water service. Use the following steps to install the flushometer for water service (see Figure 42):

Slide a rubber washer and then a slip nut with threaded end up to the top of the extension tube.

Slide a slip nut with threaded end down and then a rubber washer onto the extension tube.

Set bottom of extension tube onto spud, and fasten slip nut hand-tight to spud.

Set lower end of flushometer on top of extension tube, and fasten slip nut hand-tight onto flushometer.

Fasten flushometer's slip nut to rough-in water supply line connection at wall.

Tighten all slip nuts with a wrench.

Turn on water supply, and flush urinal several times to check for leaks and flushometer operation flow rate.

If flushometer requires adjustment, follow manufacturer's instructions.

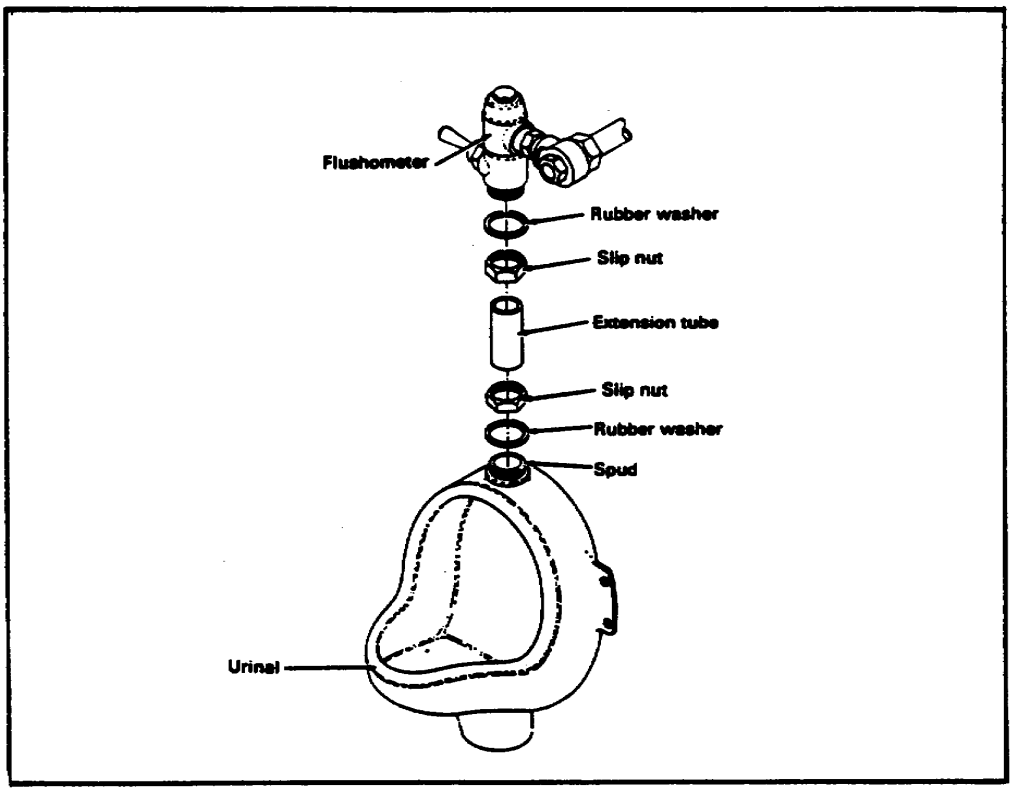

FIGURE 42. INSTALLING WATER SERVICE

Learning Event 5
SELF-CHECK EXERCISE

1. Using the letters A through D, list the steps in the correct order to install a urinal's water inlet connection.

A. Slide cover over threads of spud housing.

B. Screw locknut onto spud housing, and tighten nut.

C. Slide spud housing with threads up into water inlet hole.

D. Slide rubber gasket onto spud housing, pushing the beveled end into the water inlet hole.

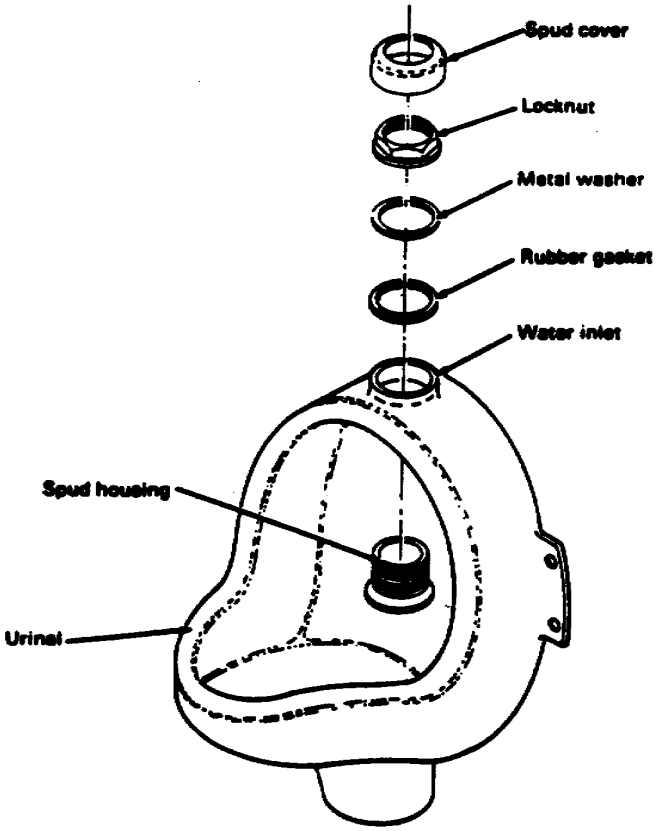

SELF-CHECK EXERCISE SOLUTIONS

1. C
   D
   B
   A

2. Using the letters A through H, list the steps in the correct order to install a flushometer for water service.

A. Slide a slip nut with threaded end down and then a rubber washer onto the extension tube.
B. Fasten flushometer's slip nut to rough-in water supply line connection at wall.
C. Set bottom of extension tube onto spud, and fasten slip nut hand-tight to spud.
D. Set lower end of flushometer on top of extension tube, and fasten slip nut hand-tight onto flushometer.
E. Tighten all slip nuts with a wrench.
F. Slide a rubber washer and then a slip nut with threaded end up to the top of the extension tube.
G. Turn on water supply, and flush urinal several times to check for leaks and flushometer operation flow rate.
H. If flushometer requires adjustment, follow manufacturer's instructions.

_____
_____
_____
_____
_____
_____
_____
_____

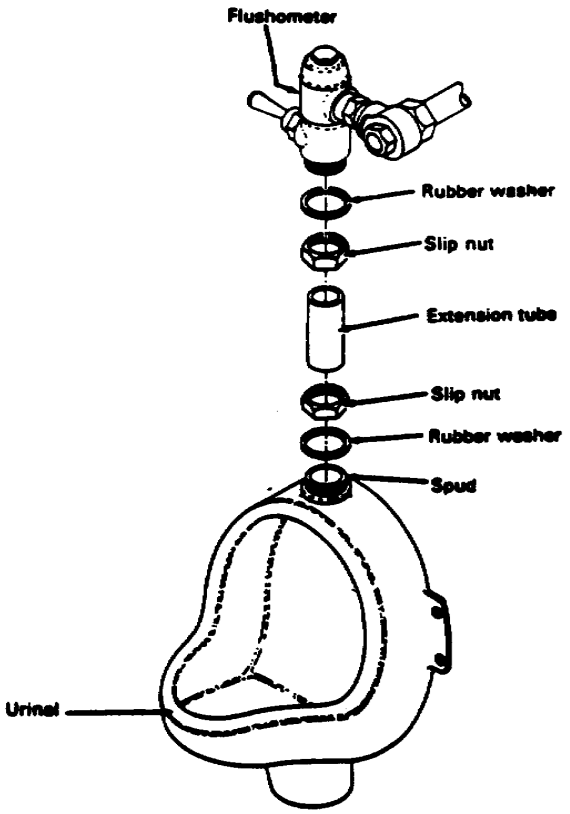

SELF-CHECK EXERCISE SOLUTIONS

2. F B
A E
C G
D H

Lesson 3
REVIEW EXERCISE

Check your understanding of Lesson 3 by completing this review exercise. Try to complete all of the questions without looking back at the lesson. When you are finished, turn to the solutions at the end of the lesson and check your responses. If you missed any, go back and restudy the place in the lesson where the information is given.

1. List, in any order, three basic types of urinals.
   A._____
   B._____
   C._____

2. Wall-hung urinals are installed using the_____rough-in specifications.

3. Using the letters A through G, list the steps in the correct order to install the drain outlet attachment.

A. Slide rubber washer and then sip nut onto tailpiece.

B. Place tailpiece against spud housing, and screw slip nut hand-tight onto spud housing.

C. Tighten slip nut with a wrench.

D. Slide metal washer onto spud housing.

E. Screw locknut onto spud housing, and tighten with a wrench.

F. Place threaded spud housing, threads down, into urinal's drain outlet.

G. Slide rubber gasket onto spud housing through the drain outlet.

_____
_____
_____
_____
_____
_____
_____

Solutions for this exercise are on page 90.

4. Using the letters A through H, list the steps in the correct order to install the P-trap.

A. Slide slip nuts and then rubber washers over curved end of drainpipe and tailpiece.

B. Slide trap's lowest end onto drainpipe and highest end onto tailpiece.

C. Fasten slip nuts hand-tight on trap.

D. Line up the connections, and tighten all slip nuts.

E. Slide escutcheon against the wall.

F. Slide escutcheon, slip nut, and rubber washer over the straight end of drainpipe.

G. Slide straight end of drainpipe into rough-in plumbing.

H. Fasten slip nut hand-tight onto rough-in plumbing.

_____
_____
_____
_____
_____
_____
_____
_____

5. Using the letters A through D, list the steps in correct order to install the water inlet connection.

A. Slide cover over threads of spud housing.

B. Screw locknut onto spud housing, and tighten nut.

C. Slide rubber gasket onto spud housing, pushing the beveled end into the water inlet hole.

D. Slide spud housing with threads up into water inlet hole.

_____
_____
_____
_____

Solutions for this exercise are on page 90.

6. Using the letters A through H, list the steps in the correct order to install a flushometer for water service.

A. Set bottom of extension tube onto spud, and fasten slip nut hand-tight to spud.

B. Set lower end of flushometer on top of extension tube, and fasten slip nut hand-tight onto flushometer.

C. Fasten flushometer's slip nut to rough-in water supply line connection at wall.

D. Tighten all slip nuts with a wrench.

E. Slide a rubber washer and then a slip nut with threaded end up to the top of the extension tube.

F. Turn on water supply, and flush urinal several times to check for leaks.

G. If flushometer requires adjustment, follow manufacturer's instructions.

H. Slide a slip nut with threaded end down and then a rubber washer onto the extension tube.

_____
_____
_____
_____
_____
_____
_____
_____

REVIEW EXERCISE SOLUTIONS

1. A Wall-hung (Page 73)
   B Floor-mounted
   C Trough
2. Manufacturer’s (Page 77)
3. F (Page 79)
   G
   D
   E
   A
   B
   C
4. F (Page 81)
   G
   H
   A
   B
   C
   D
   E
5. D (Page 84)
   C
   B
   A
6. E (Page 85)
   H
   A
   B
   C
   D
   F
   G

SUBCOURSE
EN5114

EDITION
A

US ARMY ENGINEER SCHOOL

REPAIR VALVES AND FIXTURE CONTROL DEVICES

Plumbing V

THE ARMY INSTITUTE FOR PROFESSIONAL DEVELOPMENT
ARMY CORRESPONDENCE COURSE PROGRAM

AIPD

READINESS/
PROFESSIONALISM
THRU
GROWTH

US ARMY PLUMBER

MOS 51K SKILL LEVELS 1 AND 2 COURSE

REPAIR VALVES AND FIXTURE CONTROL DEVICES PLUMBING V

SUBCOURSE NO. EN5114

US Army Engineer School
Fort Leonard Wood, Missouri

ELEVEN CREDIT HOURS

GENERAL

The Repair Valves and Fixture Control Devices subcourse, part of the MOS 51K Skill Levels 1 and 2 course, is designed to teach the knowledge required to repair valves and fixture control devices. The subcourse is presented in two lessons, each corresponding to a terminal objective as indicated below.

LESSON 1
MAINTENANCE OF VALVES

OBJECTIVE: Describe the procedures used to repair valves.

TASK: 051-248-1011, Repair valves and fixture control devices.

CONDITIONS: You will be given subcourse booklet EN5114 and an examination response sheet. You will work at your own pace and in your own selected environment without supervision.

STANDARDS: Within approximately 8 hours, you should be able to study the lesson resources, answer the review exercises, and select the correct response to each of the examination questions. You must respond correctly to 70 percent of the examination questions in order to receive credit for this subcourse.

LESSON 2
MAINTENANCE OF FIXTURE CONTROL DEVICES

OBJECTIVE: Describe the procedures used to repair fixture control devices.

TASK: 051-248-1011, Repair valves and fixture control devices.

CONDITIONS: You will be given subcourse booklet EN5114 and an examination response sheet. You will work at your own pace and in your own selected environment without supervision.

STANDARDS: Within approximately 3 hours, you should be able to study the lesson resources, answer the review exercises, and select the correct response to each of the examination questions. You must respond correctly to 70 percent of the examination questions in order to receive credit for this subcourse.

TABLE OF CONTENTS

	Page
ADMINISTRATIVE INSTRUCTIONS	iv
GRADING AND CERTIFICATION INSTRUCTIONS	iv
INTRODUCTION	iv
Lesson 1: MAINTENANCE OF VALVES	1
Learning Event 1: Identifying Valves	1
Learning Event 2: Repairing Valves	10
Learning Event 3: Repairing Faucets	15
Learning Event 4: Repairing Flushometer Valves	22
Review Exercise	30
Review Exercise Solutions	38
Lesson 2: MAINTENANCE OF FIXTURE CONTROL DEVICES	38
Learning Event 1: Repairing Flushing Mechanisms	39
Learning Event 2: Repairing Control Devices	44
Review Exercise	48
Review Exercise Solutions	52
STUDENT INQUIRY SHEET (Administrative)	**Following Examination**
STUDENT INQUIRY SHEET (Subcourse Content)	**Following Examination**

GRADING AND CERTIFICATION INSTRUCTIONS

Important: Electronic Examination Information

This paper subcourse does not contain the examination. The examination response sheet is included only as a mailing label. You must go to the following web site to complete the examination and submit it for grading.

http://www.aimsrdl.atsc.army.mil/accp/accp_top.htm

Registered students (those with ACCP userids and passwords) should key in the userid and password to LOGON, then click on the EXAM button to access the examination.

Students who have not yet registered should click on the REGISTER button on the lower right corner of the screen. Follow directions to create a userid and password. Then click on the EXAM button to access the examination.

INTRODUCTION

Valves and fixture control devices control the flow of water into, through, and out of the plumbing system. Knowledge of the repair of valves and fixture control devices is a necessity. In order to repair valves and fixture control devices, a plumber must be familiar with their construction and operation. A close inspection of any valve or fixture control device consists of examining for visible leaks, wear, and breakage. You may be required to partially or completely disassemble a mechanism to make a repair.

Lesson 1
MAINTENANCE OF VALVES

Objective
At the end of this lesson, you will be able to describe the procedures to repair valves.

Task
051-248-1011, Repair valves and fixture control devices.

Conditions
You will be given subcourse booklet EN5114 and an examination response sheet. You will work at your own pace and in your own selected environment without supervision.

Standards
Within approximately 8 hours, you should be able to study the lesson resources, answer the review exercises, and select the correct response to each examination question. You must respond correctly to 70 percent of the examination questions in order to receive credit for this subcourse.

Credit Hours
8

References
FM 5-51K 1/2
TM 5-551K

Learning Event 1:
IDENTIFYING VALVES

Valves come in many types, shapes, and sizes for a building's water plumbing system. The most common types used in a water pipeline system are gate, globe, and check valves. Plumbing fixtures also require valves such as flushometers and faucets. When a valve leaks or fails to operate properly, it has to be repaired. The repair may require a partial or complete disassembly of the valve. A repaired valve must restore the valve to a totally serviceable operating condition.

Pipeline Valves. Valves used in water pipelines are illustrated here. A gate valve completely shuts off the flow of water (figure 1).

FIGURE 1. GATE VALVE

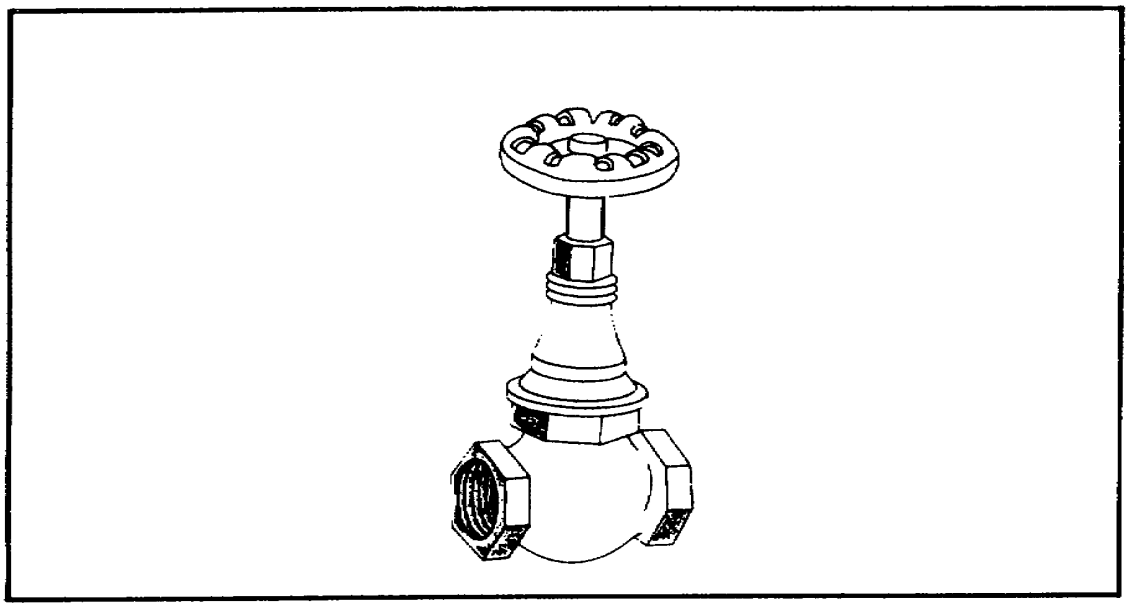

A globe valve regulates or controls the flow of water (figure 2).

FIGURE 2. GLOBE VALVE

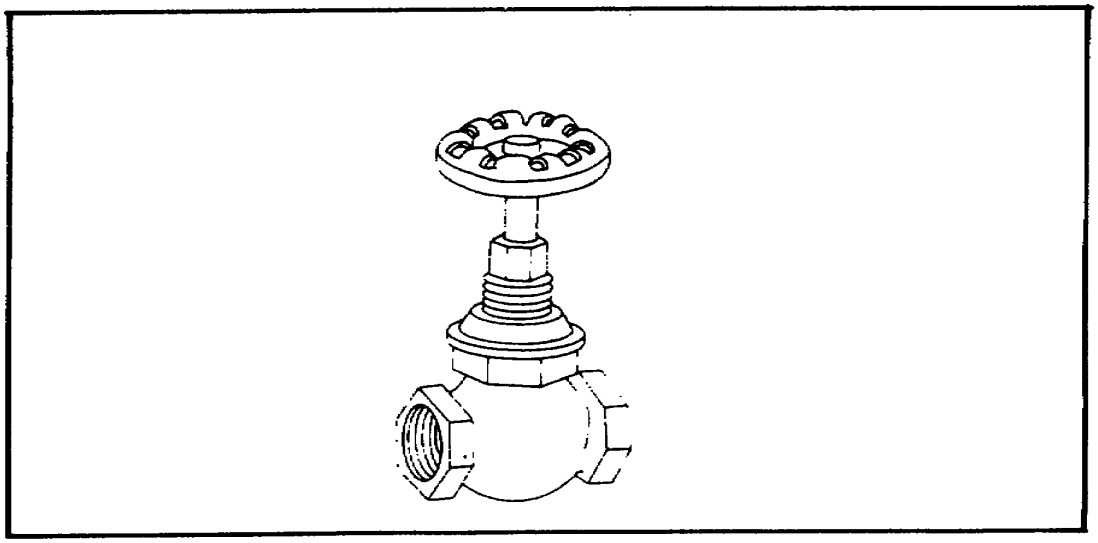

An angled globe valve regulates or controls and changes the direction of the flow of water (figure 3).

FIGURE 3. ANGLED GLOBE VALVE

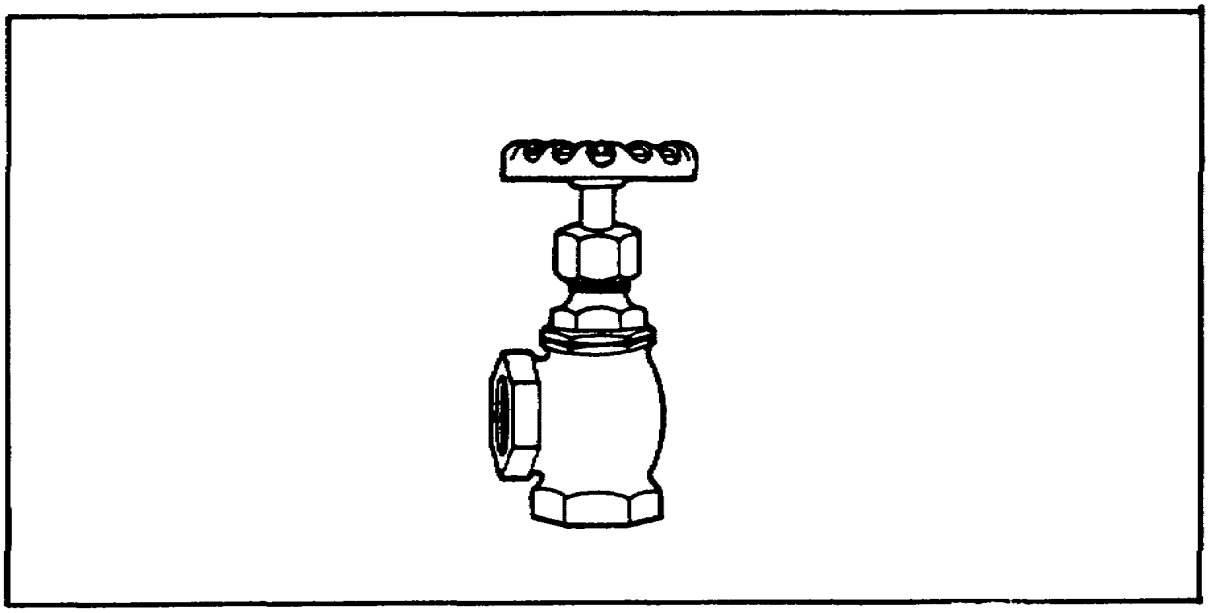

A check valve makes water flow in one direction only, then closes automatically to prevent backflow (figure 4).

FIGURE 4. SWING CHECK VALVE

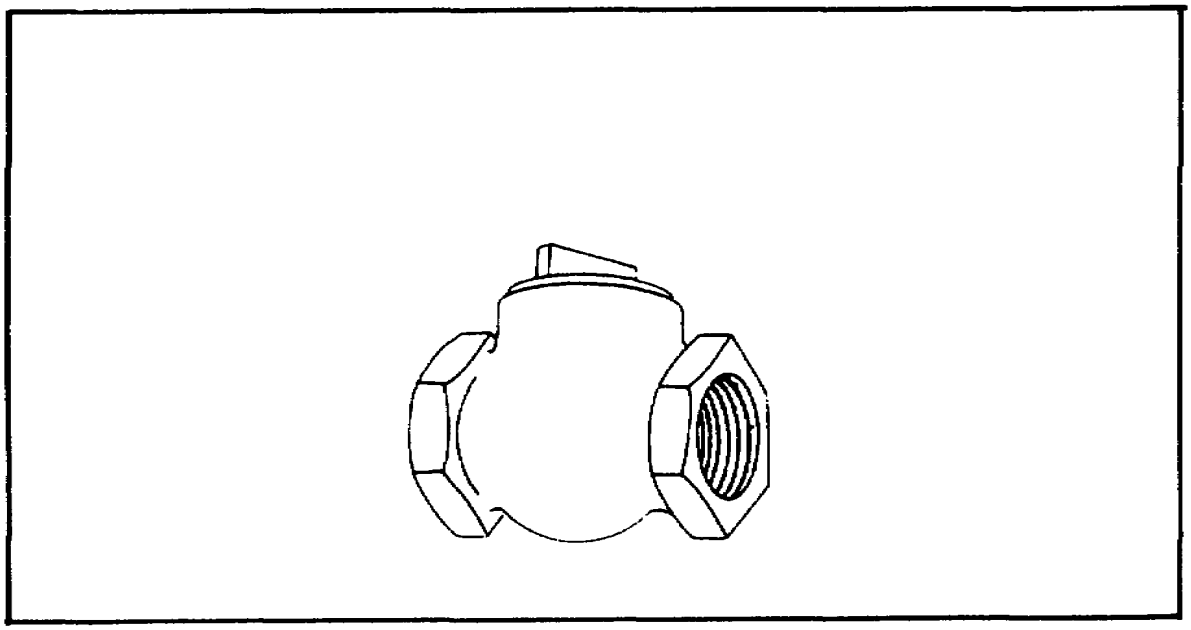

Faucets. Valves (faucets) used for plumbing fixtures, such as lavatories and sinks, are illustrated in figures 5 through 8 on pages 4 and 5.

A single faucet with plain bibb turns hot or cold water flow on and off (figure 5).

FIGURE 5. SINGLE FAUCET WITH PLAIN BIBB

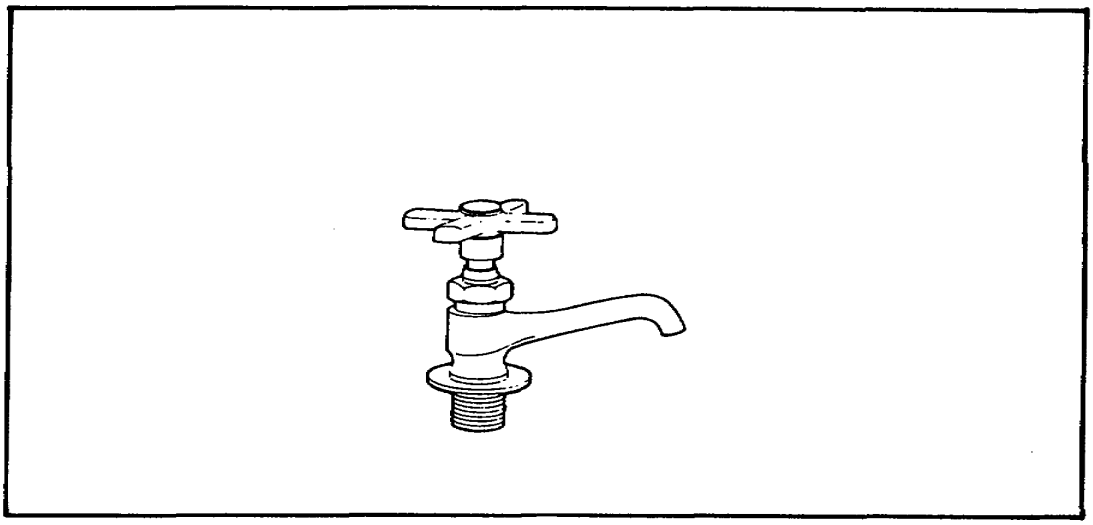

A single faucet with hose bibb turns hot or cold water flow on and off (figure 6).

FIGURE 6. SINGLE FAUCET WITH HOSE BIBB

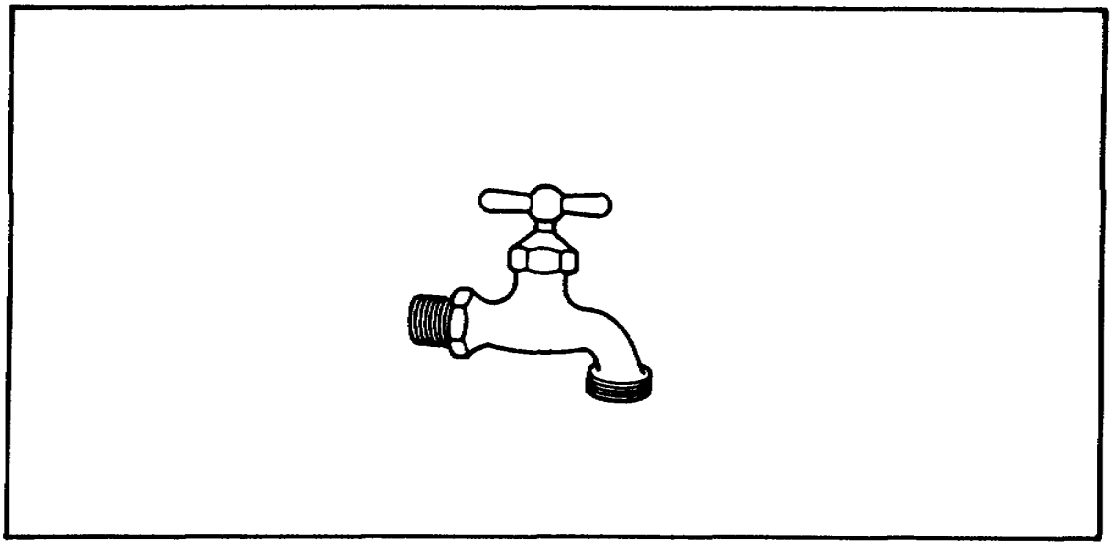

A combination faucet with hot and cold water handles turns water flow on and off (figure 7).

FIGURE 7. COMBINATION FAUCET WITH HANDLES

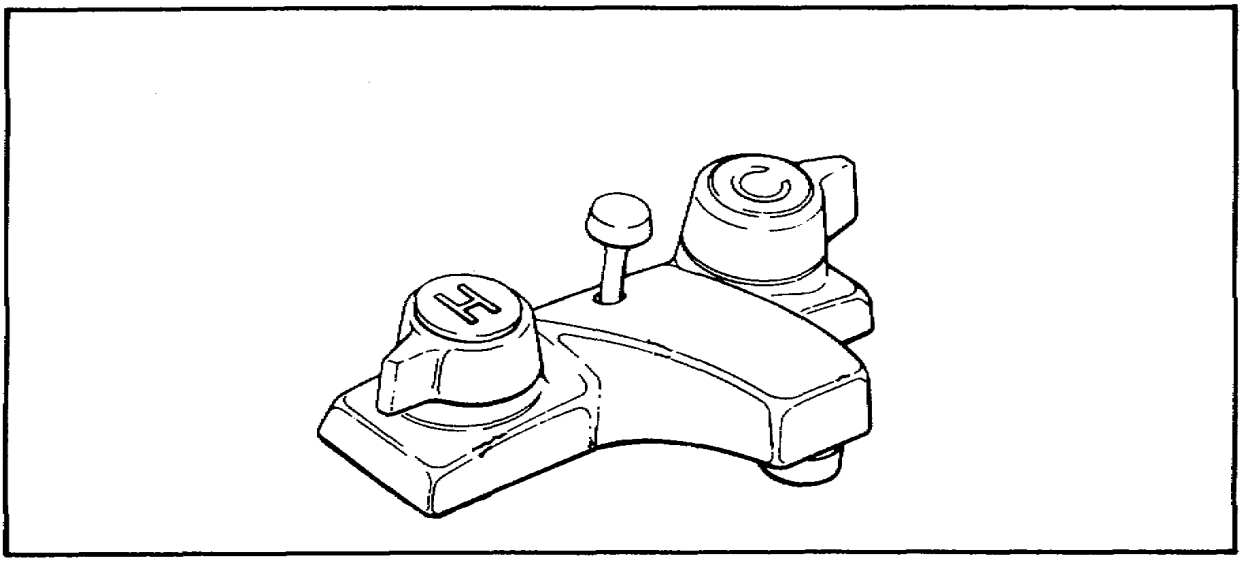

A combination faucet with a single lever turns hot and cold water flow on and off (figure 8).

FIGURE 8. COMBINATION FAUCET WITH LEVER

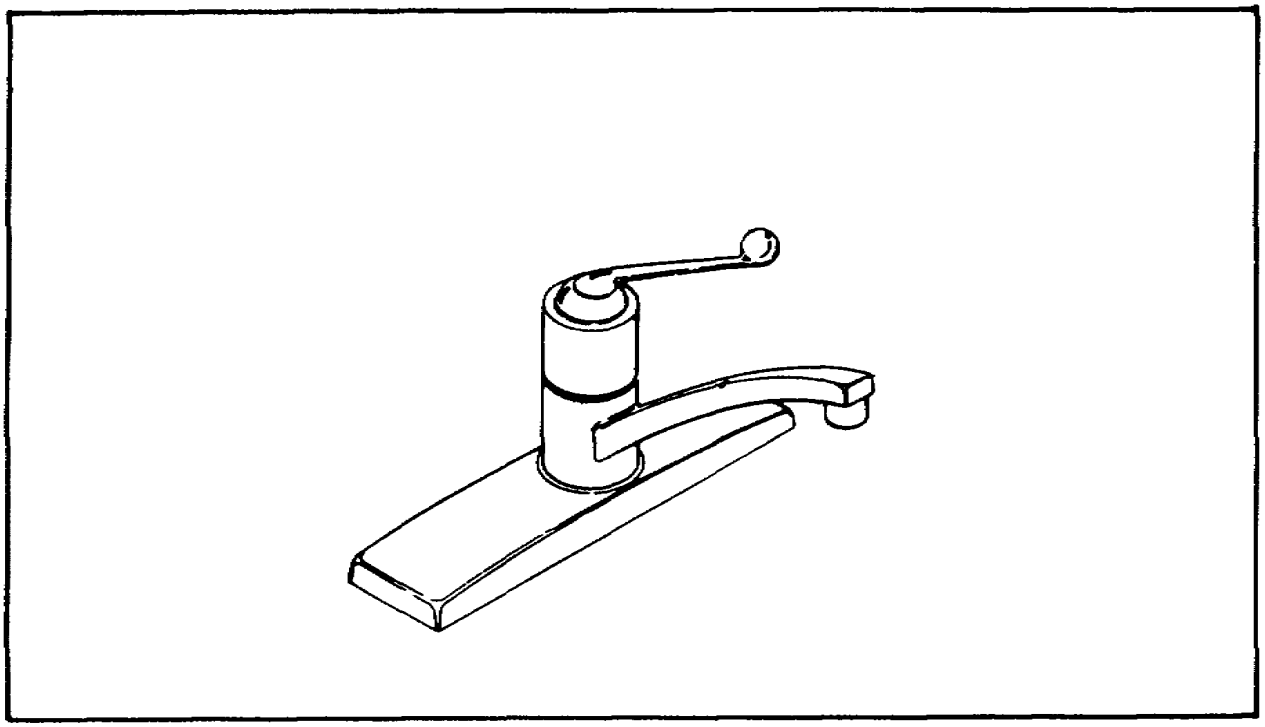

Flushometers. Flushometer valves used for plumbing fixtures such as water closets and urinals are illustrated in figures 9 and 10. Both types of flushometer valves, diaphragm and piston, discharge a fixed amount of water for flushing fixtures. The amount is activated by direct water pressure.

FIGURE 9. DIAPHRAGM FLUSHOMETER VALVE

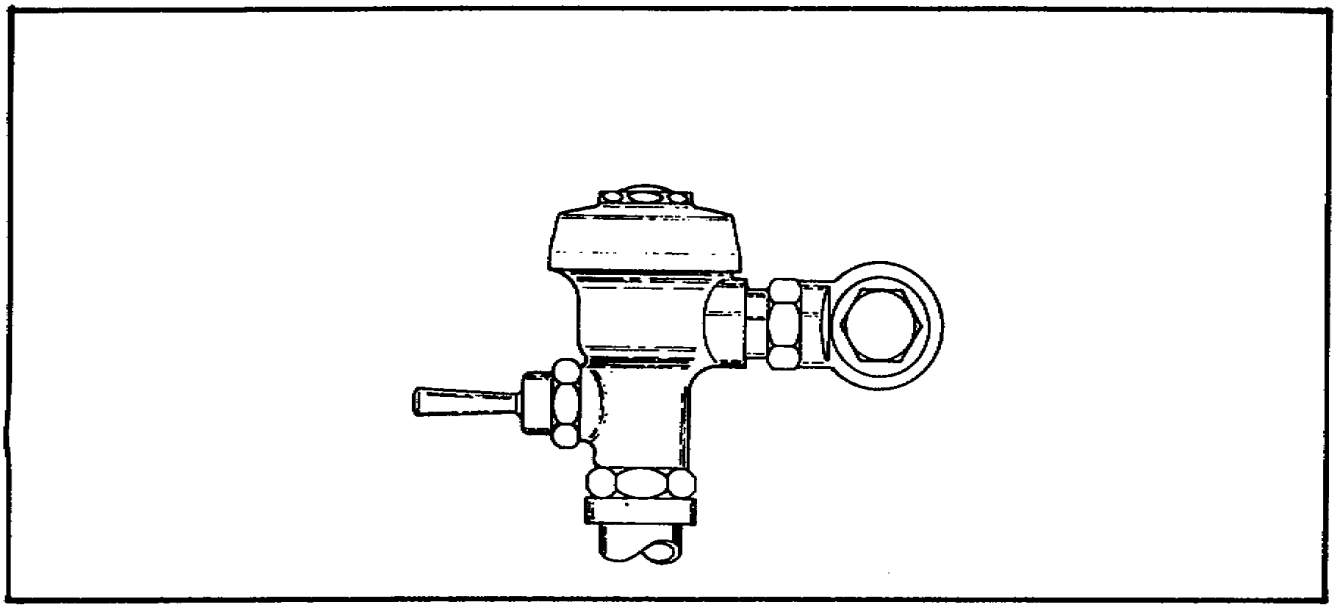

FIGURE 10. PISTON FLUSHOMETER VALVE

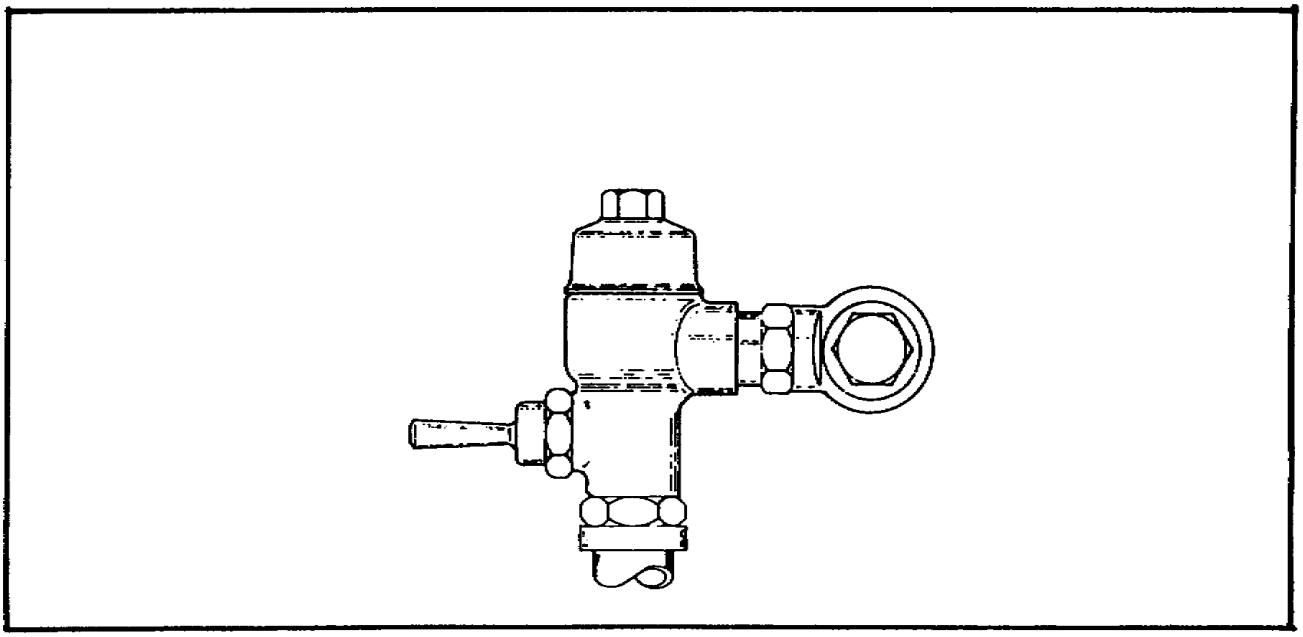

SELF-CHECK EXERCISE
Solutions to this exercise are on page 10.

1. Identify each valve correctly using the choices provided. Write your answer in the blanks.

   Gate valve
   Angled globe valve
   Swing check valve

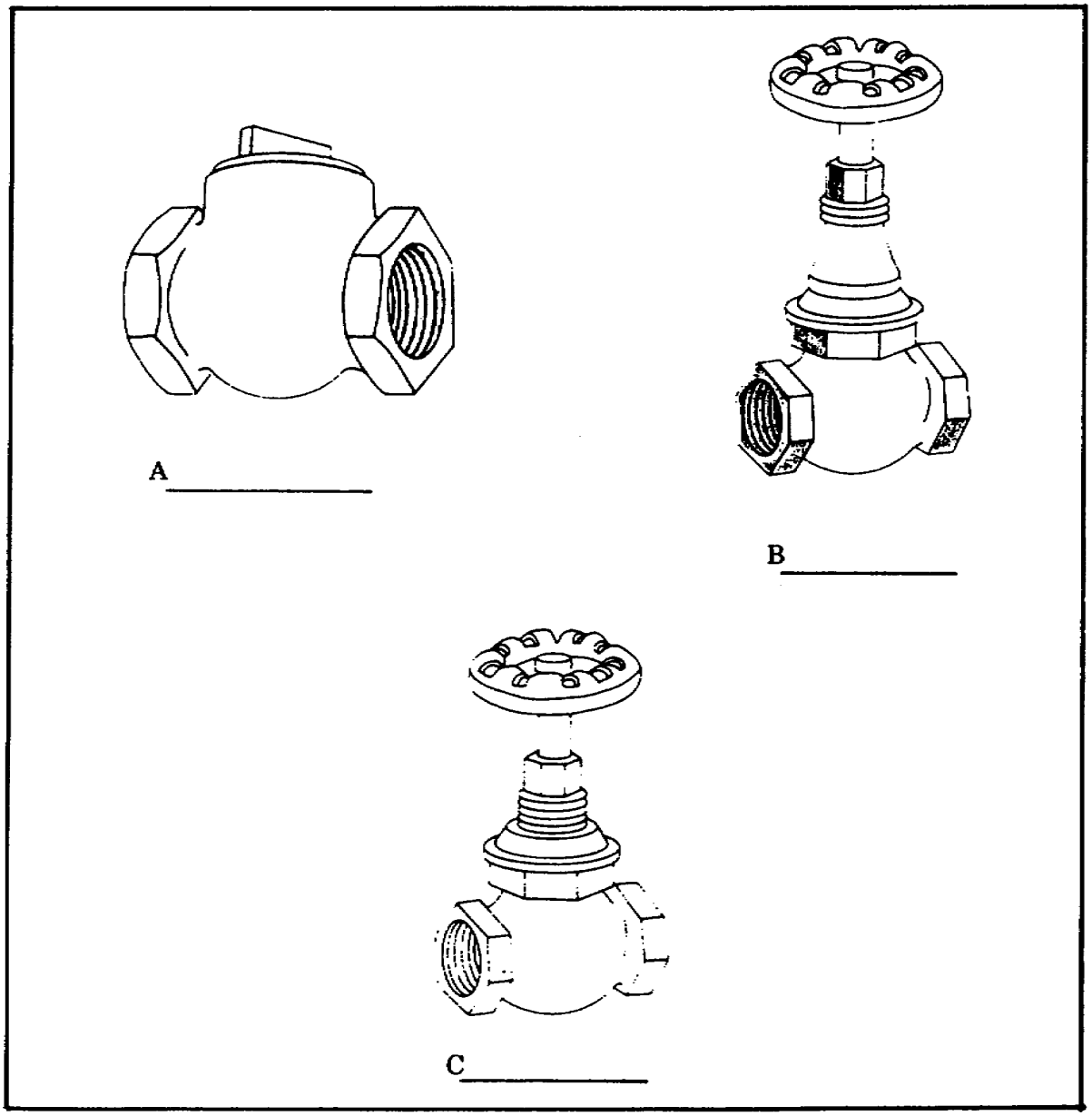

2. Identify each faucet correctly using the choices provided. Write your answer in the blanks.

Single faucet with hose bibb
Combination faucet with a single lever
Combination faucet with hot and cold water faucets
Single faucet with plain bibb

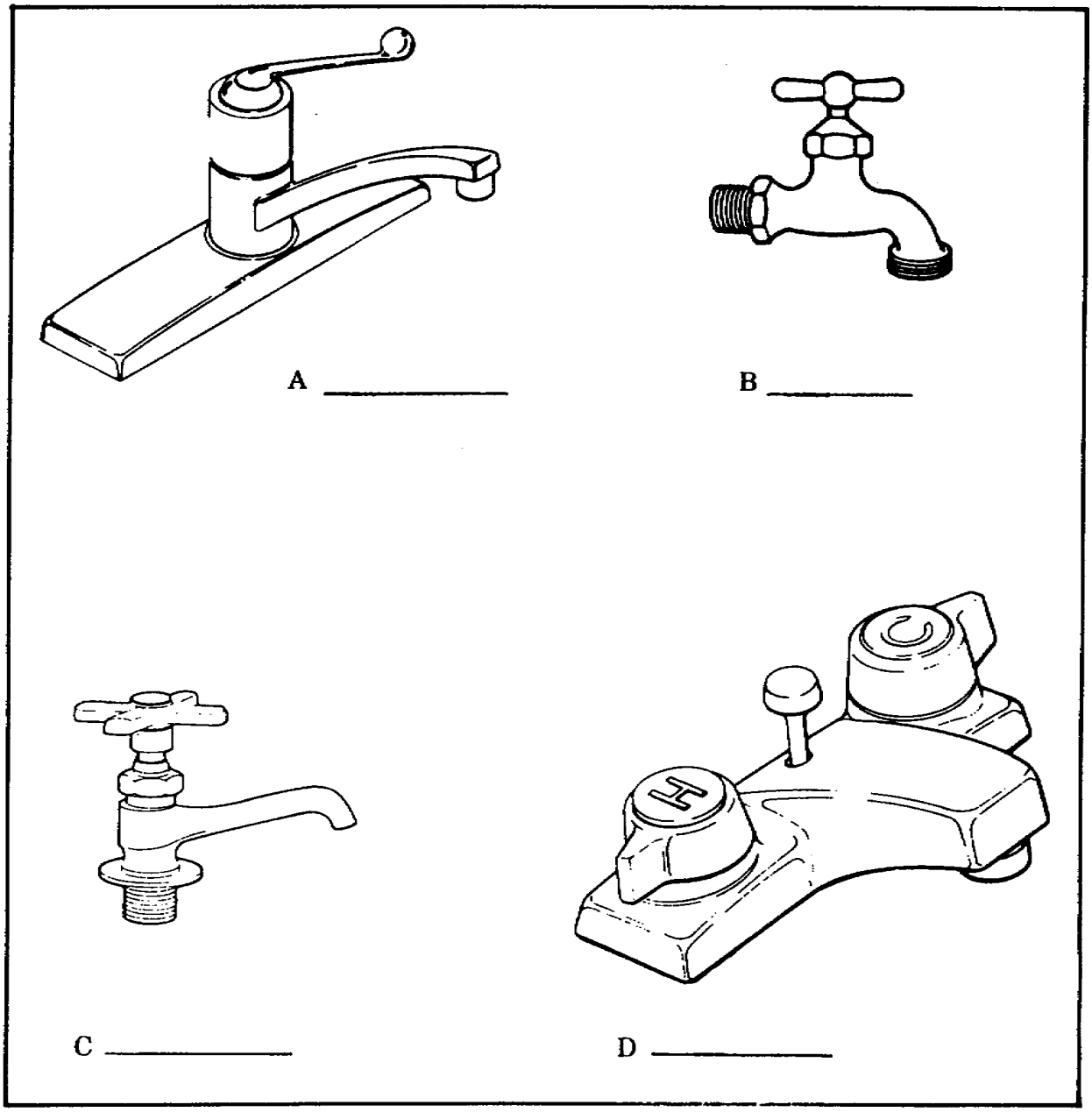

3. Look at the illustration. Which flushometer valve is the piston type? The piston type is _____.

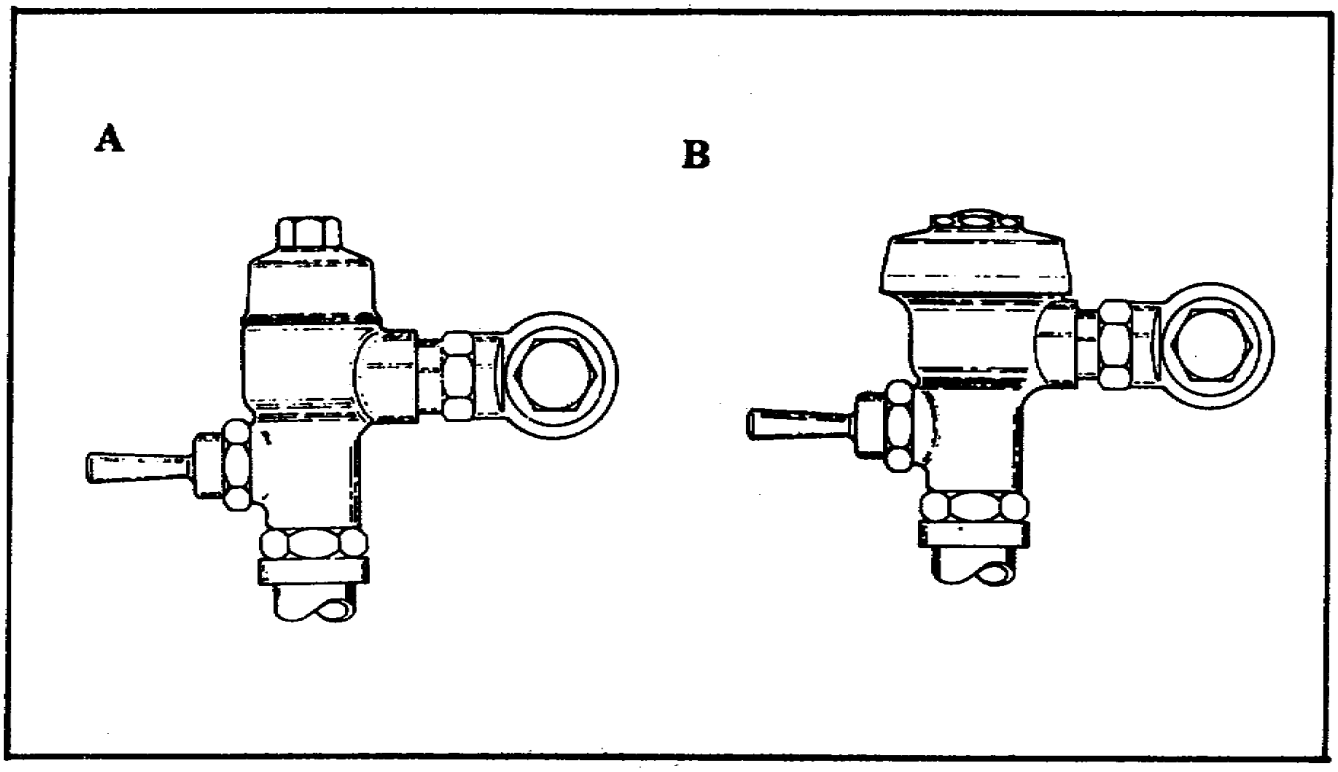

Learning Event 2:
REPAIRING VALVES

Gate, globe, and check valves should be inspected pedodically for leaks and proper operation. If a leak is found or the valve operates improperly, the problem is located. A repair is made to restore the valve to a serviceable operating condition. See figures 11 through 13 on pages 10 through 13.

FIGURE 11. CROSS SECTION OF GATE VALVE

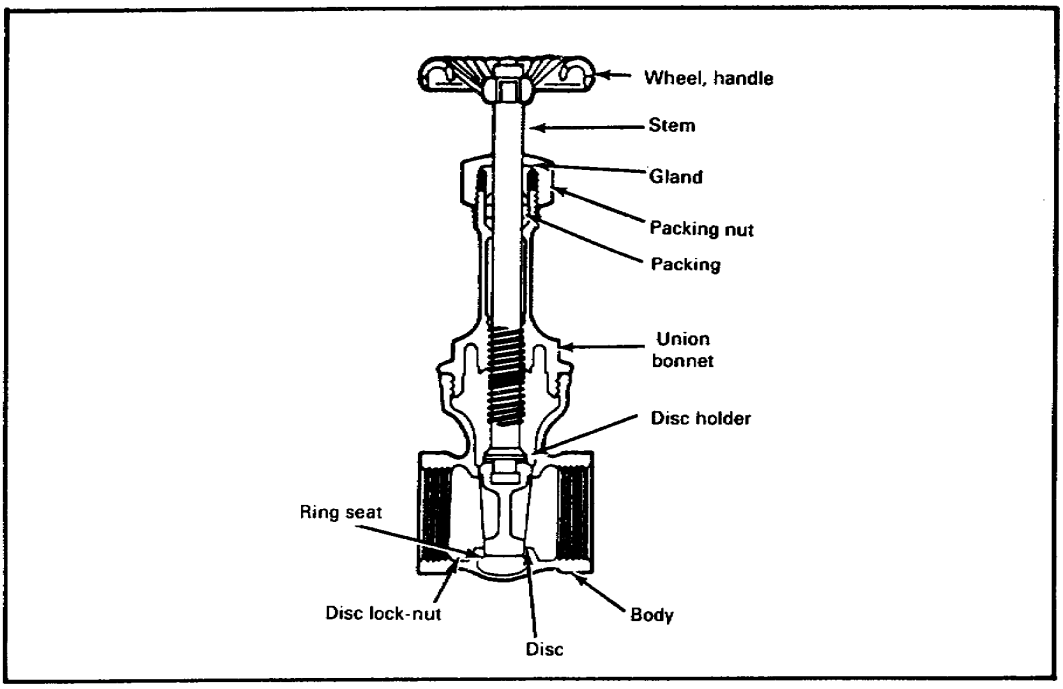

SELF-CHECK EXERCISE SOLUTIONS

1. VALVES
   A. Swing check valve
   B. Gate valve
   C. Angled globe valve

2. FAUCETS
   A. Combination faucet with a single lever
   B. Single faucet with hose bibb
   C. Single faucet with plain bibb
   D. Combination faucet with hot and cold water handles

3. The piston type is A.

GATE VALVE MALFUNCTIONS AND REPAIRS

Malfunction	Repairs
1. Leak at stem and packing nut.	Tighten packing nut. If leak continues— a. Turn off water supply. b. Then remove wheel handle. c. Set in new packing. d. Replace packing nut and wheel handle. e. Turn water on and check for leaks.
2. Valve will not close properly to stop water flow.	a. Turn off water supply, then disassembly to valve from the wheel handle to the body. b. Resurface disc with a mixture of oil and lapping compound. c. Reassemble the valve. d. Turn on water supply and check valve for proper operation and leaks. Note: Since the valves are completely disassembled, other parts may be needed for reassembly.
3. Malfunction unknown in valve	a. Turn off water supply, then dissassemble the valve until the problem is located. b. Replace faulty parts and reassemble the valve. c. Turn on water supply and check valve for proper operation and leaks.

NOTE: If the valve cannot be repaired, replace it.

FIGURE 12. CROSS SECTION OF GLOBE VALVE

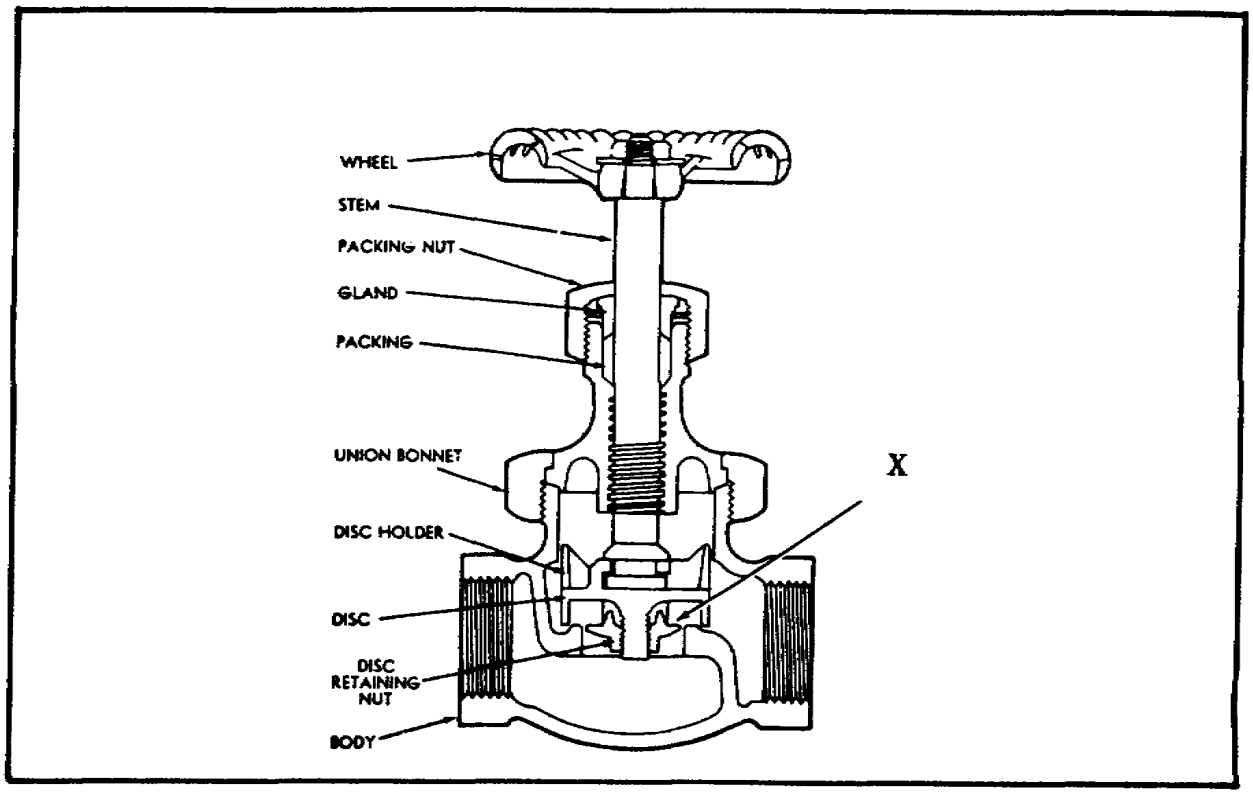

GLOBE VALVE MALFUNCTIONS AND REPAIRS

Malfunction	Repairs
1. Leak at stem and packing.	Tighten packing nut.
	If leak continues—
	a. Turn off water supply.
	b. Then remove wheel handle.
	c. Set in new packing.
	d. Replace packing nut and wheel handle.
	e. Turn water on and check for leaks.
2. Valve will not regulate or control the amount of water flow when—	a. Turn off water supply.
	b. Disassemble valve from handle to the body.
a. Composition disc type is used.	c. Remove old disc and replace it with a new one.
	d. Reassemble the valve.

GLOBE VALVE MALFUNCTIONS AND REPAIRS (Continued)

	e. Turn on the water supply and check valves for proper operation and leaks.
b. Plug type or conventional disc is used.	a. Turn off water supply.
	b. Disassemble valve from handle to the body.
	c. Remove the disc.
	d. Insert a washer under it and then lap the disc to the seat for a snug fit.
	e. Reassemble valve, turn on water suppply, and check valve for proper operation and leaks.
3. Malfunction unknown in valve	a. Turn off water supply, then disassemble the valve until manfunction is located.
	b. Replace faulty part and reassemble the valve.
	c. Turn on water supply and check valve for proper operation and leaks.

NOTE: If valve cannot be repaired, replace it.

FIGURE 13. CROSS SECTION OF SWING CHECK VALVE

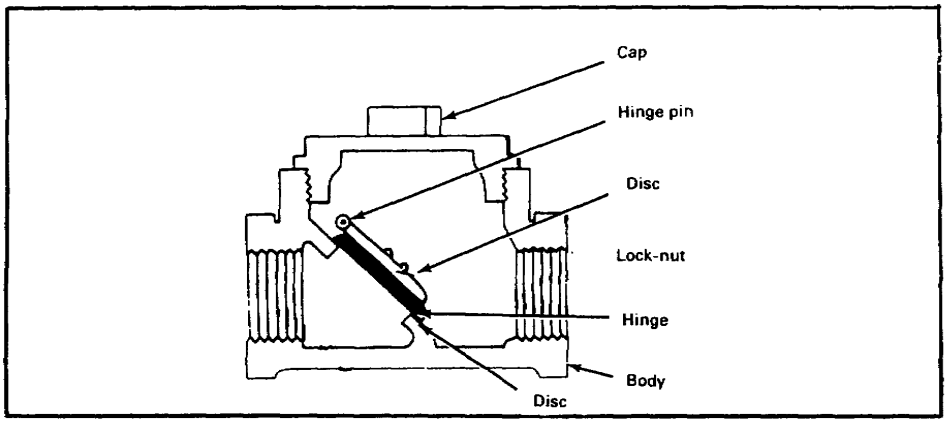

SWING CHECK VALVE MALFUNCTIONS AND REPAIRS

Malfunction	Repairs
1. Loose disc lock nut causing water back flow.	a. Turn water supply off, then remove cap.

SWING CHECK VALVE MALFUNCTIONS AND REPAIRS (Continued)

	b. Tighten lock nut c. Replace cap and turn on water supply. d. Check valve for proper operation and leaks.
2. Hinge not closing completely dut to wear.	a. Turn water supply off, then remove cap. b. Replace hinge pin or hinge with hinge pin. c. Replace cap and turn on water supply. d. Check valve for proper operation and leaks.
3. Worn disc face.	a. Turn water supply off, then remove cap. b. Remove the lock nut and then the disc. c. Attach new disc to hinge and tighten lock nut. d. Replace cap and turn on water supply. e. Check valve for proper operation and leaks.

NOTE: If valve cannot be repaired, replace it.

SELF-CHECK EXERCISE

Fill in the blanks with your responses. Solutions are on page 16.

1. A leak at the stem and packing nut is repaired by replacing the _____.
2. The disc in a gate valve can be repaired using a mixture of oil and lapping compound to _____ the disc.
3. A composition type disc in a globe valve can be repaired by _____ it.
4. A plug or conventional type disc in a globe valve can be repaired by inserting a _____ and lapping the disc to the seat.
5. A swing check valve's hinge pin or hinge with hinge pin is repaired when not completely _____.
6. A swing check valve's worn disc can be repaired by _____ it.

Learning Event 3:
REPAIRING FAUCETS

Faucets on lavatories/sinks are valves that receive a great deal of use, resulting in leaks or failures over a period of time through wear and tear. When this happens, the malfunction of the faucet is determined and repaired. The repair must restore the faucet to a serviceable, operating condition. See figures 14 through 16 on pages 15 through 19.

FIGURE 14. SINGLE FAUCET PARTS

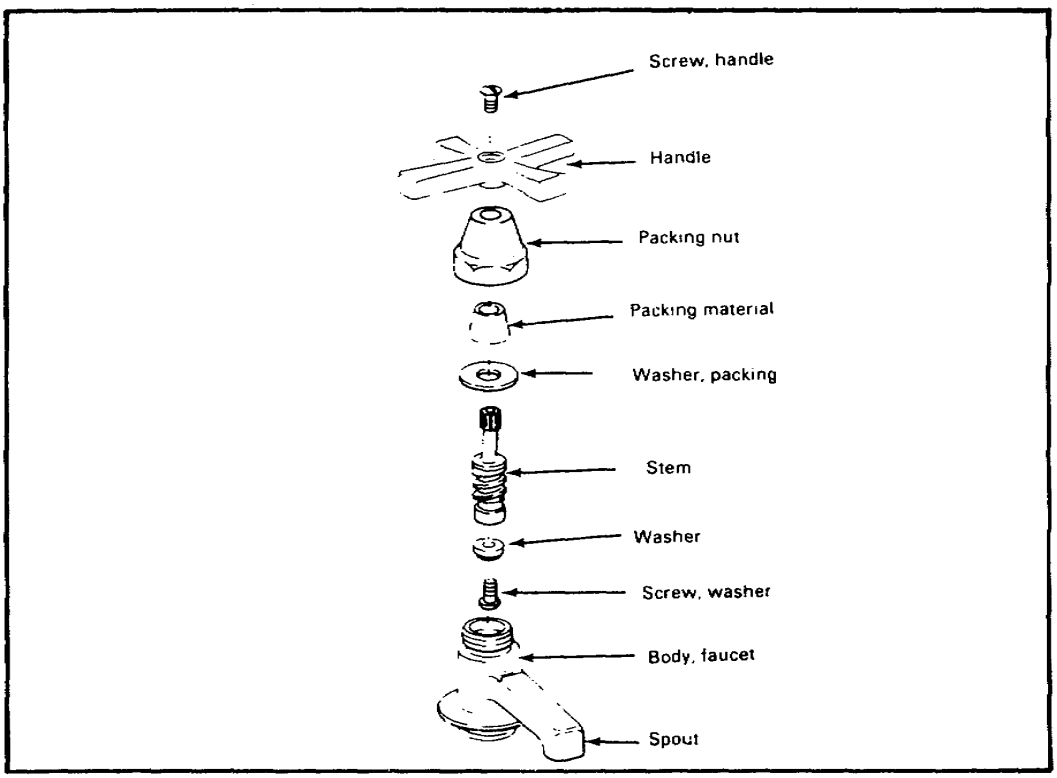

SINGLE FAUCET MALFUNCTIONS AND REPAIRS

Malfunction	Repairs
1. Leak at stem and packing nut.	a. Turn off water supply with shutoff valve.
	b. Remove cap, screw, and handle.
	c. Remove packing nut with a wrench.
	d. Remove old packing material and washer.

SINGLE FAUCET MALFUNCTIONS AND REPAIRS (Continued)

e. Place new washer and packing material on stem.

f. Screw packing nut onto the body of the faucet hand tight, then tighten with wrench.

g. Replace handle, screw, and cap.

h. Turn on water supply to check for leaks and faucet operation.

2. Leak at spout.

a. Turn off water supply with shutoff valve.

b. Disassemble faucet down to the body and remove the stem.

c. Remove screw and washer from bottom of stem.

d. Place a new washer into the bottom of the stem and secure to stem with new screw.

e. Check valve seat inside of body. If it is chipped or rough, replace seat with a repacking tool. If seat is OK, place stem onto body.

f. Reassemble valve and turn on water supply.

g. Check for leaks and faucet operation.

SELF-CHECK EXERCISE SOLUTIONS

1. Packing
2. Resurface
3. Replacing
4. Washer
5. Closing
6. Replacing

FIGURE 15. COMBINATION FAUCET PARTS

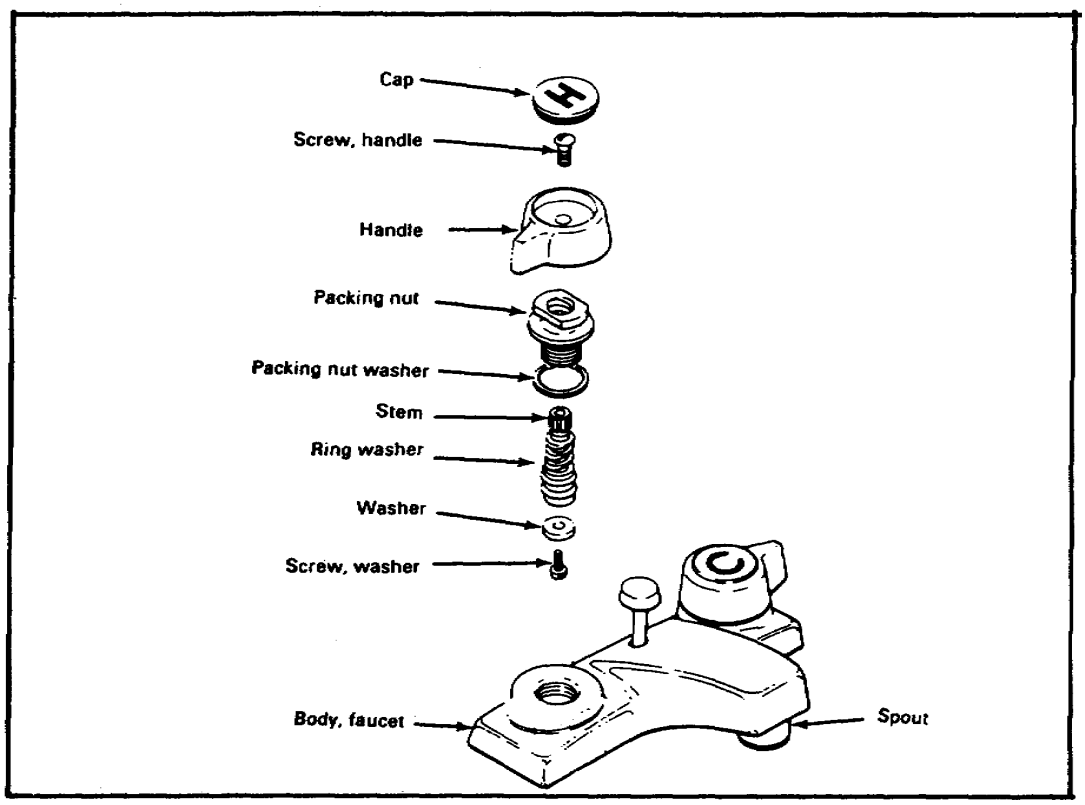

COMBINATION FAUCET MALFUNCTIONS AND REPAIRS

Malfunction	Repairs
1. Leak at top of stem.	a. Turn off water supply at shutoff valve. b. Remove cap, screw, and handle. c. Remove packing nut with a wrench. d. Remove stem from body. e. Remove worn washer by sliding it off the lower end of the stem. f. Slide a new washer onto the stem's lower end. g. Reassemble all parts in their proper order. h. Turn on water supply to check for leaks and proper faucet operation.

COMBINATION FAUCET MALFUNCTIONS AND REPAIRS (Continued)

2. Leak at spout.	a. Turn off water supply at shutoff valve. b. Remove cap, screw, and handle. c. Remove packing nut with a wrench. d. Remove stem from body. e. Remove screw and worn washer from the bottom of the stem. f. Place a new washer into the bottom of the stem and secure to stem with a new screw. g. Check valve seat inside of body. If it is chipped or rough, reface seat with a refacing tool. If seat is OK, place stem into body. h. Reassemble all parts in their proper order. i. Turn on water supply and check for leaks and proper faucet operation.
3. Leak at base of body.	a. Turn off water supply at shutoff valve. b. Remove cap, screw, and handle. c. Remove packing nut with wrench. d. Remove worn washer from packing nut. e. Slide a new washer onto packing nut for a snug fit. f. Reassemble all parts in their proper order. g. Turn on water supply and check for leaks and proper faucet operation.

FIGURE 16. SINGLE LEVER COMBINATION FAUCET PARTS

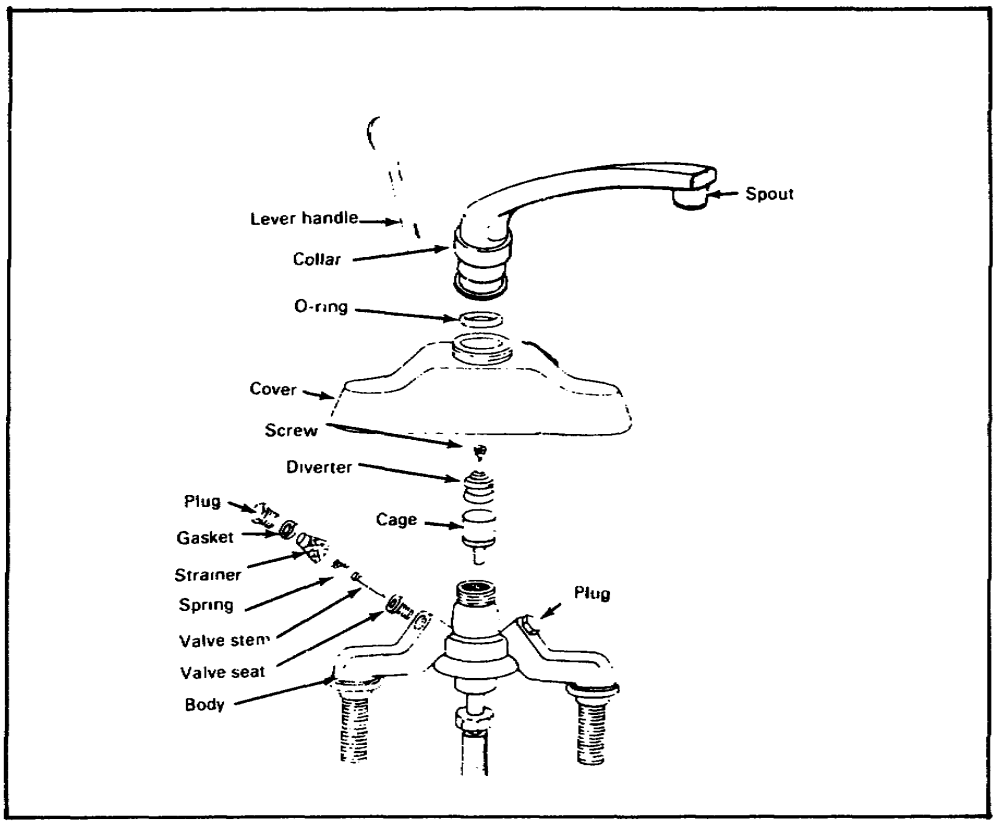

SINGLE LEVER COMBINATION FAUCET, VALVE-TYPE, MALFUNCTIONS, AND REPAIRS

Malfunction	Repairs
1. Leak at spout.	a. Turn off hot and cold water supply at shutoff valves. b. Unscrew the collar and lift spout off. c. Remove lever from rear of body. d. Remove worn O-ring and install a new O-ring at the base of the spout. e. Reassemble spout by tightening collar. f. Turn on water supply and check for leaks.

SINGLE LEVER COMBINATION FAUCET, VALVE-TYPE, MALFUNCTIONS AND REPAIRS (Continued)

2. Malfunction unknown.

a. Turn off hot and cold water supply at shutoff valves.

b. Unscrew the collar and lift off spout.

c. Remove cover.

d. Remove plug and disassemble each part until faulty part or parts are located.

e. Replace faulty part or parts.

f. Reassemble faucet.

g. Turn on water supply and check for leaks and proper faucet operation.

NOTE: There are three types of washerless faucets: valve, ball, and cartridge. Each type has different internal working parts. Use manufacturer's instructions for all repairs.

Lesson 1/Learning Event 3

SELF-CHECK EXERCISE

Fill in the blanks with your responses. Answers are on page 23.

1. A single faucet is leaking at the stem and packing nut To repair the leak, you replace the _____.

2. A single faucet is leaking at the spout To repair the leak, you replace the _____ at the bottom of the stem.

For questions 3 and 4 use the illustration below.

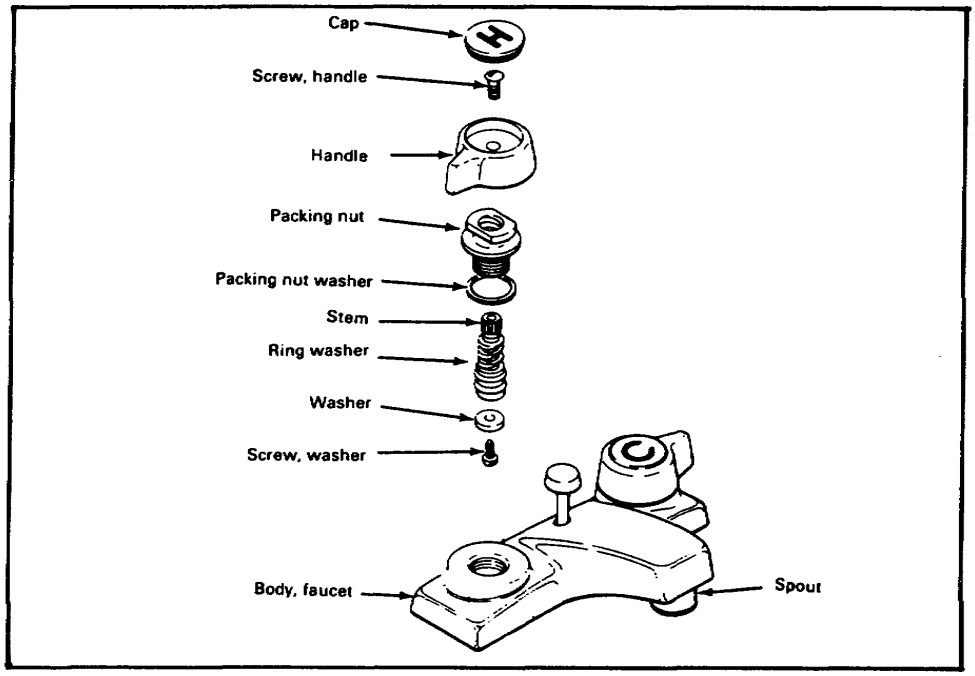

3. The combination faucet is leaking at the top of the stem. Which part would you replace?
4. The combination faucet is leaking at the base of the body. Which part would you replace?
5. A single lever combination faucet, valve type, is leaking at the spout.
Which part would you replace?
   A. Diverter
   B. O-ring
   C. Plug
   D. Valve seat

Learning Event 4:
REPAIRING FLUSHOMETER VALVES

Flushometer valves on water closets and urinals are automatic flushing valves. Over a period of time, a malfunction inside the valve or handle assembly can occur. When this happens, the malfunction is located and repaired. See figures 17 through 19 on pages 22 through 25.

FIGURE 17. DIAPHRAGM FLUSHOMETER PARTS

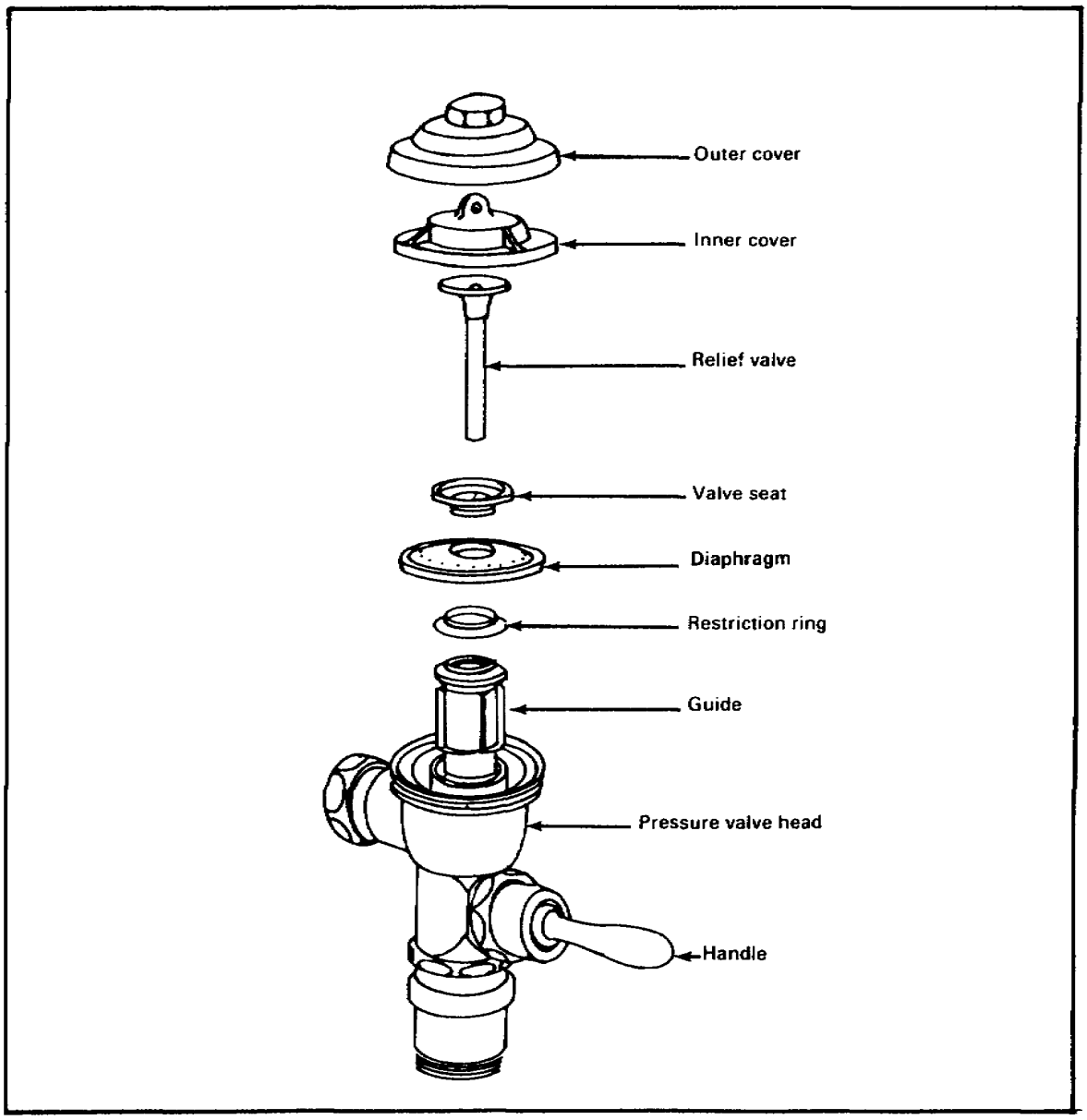

DIAPHRAGM-TYPE FLUSHOMETER VALVE MALFUNCTIONS AND REPAIRS

Malfunction	Repairs
Not flushing or will not stop flushing.	a. Turn off water supply.
	b. Remove outer cover with wrench.
	c. Remove inner cover. If cover will not come off, pry off with a screwdriver.
	d. Remove relief valve.
	e. Remove valve seat.
	f. Remove clogged or worn diaphragm.
	g. Install new diaphragm.
	h. Reassemble the valve.
	i. Turn on water supply.
	j. Check valve operation.

SELF-CHECK EXERCISE SOLUTIONS

1. Packing material
2. Washer
3. C
4. B
5. B

FIGURE 18. PISTON FLUSHOMETER PARTS

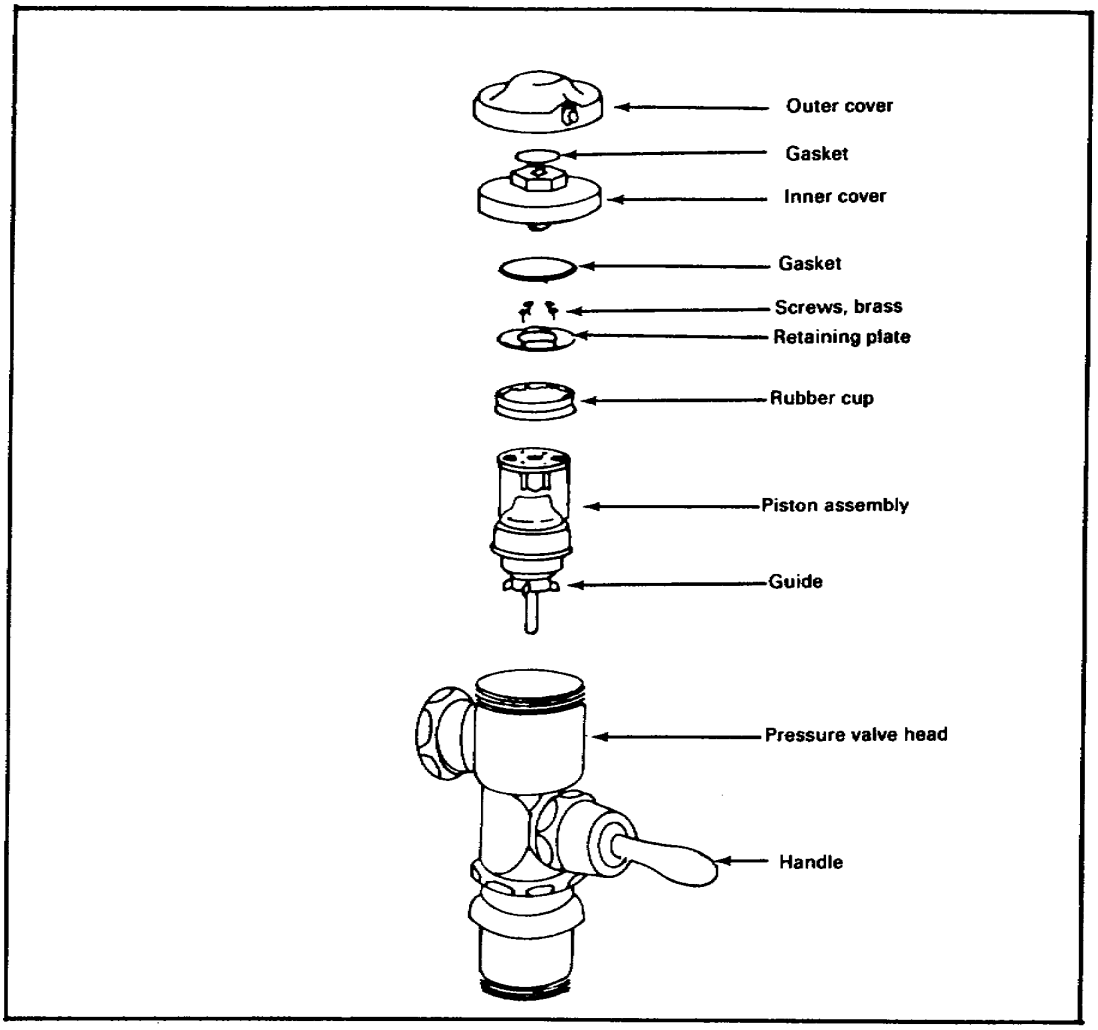

PISTON-TYPE FLUSHOMETER VALVE MALFUNCTIONS AND REPAIRS

Malfunction	Repairs
Not flushing or will not stop flushing.	a. Turn off water supply. b. Remove outer cover and gasket. c. Remove inner cover and gasket. d. With a screwdriver, remove brass screws and remove retaining plate.

e. Remove clogged or worn rubber cup.

f. Install new rubber cup.

g. Reassemble the valve.

h. Turn on water supply.

i. Check valve operation.

FIGURE 19. FLUSHOMETER HANDLE PARTS

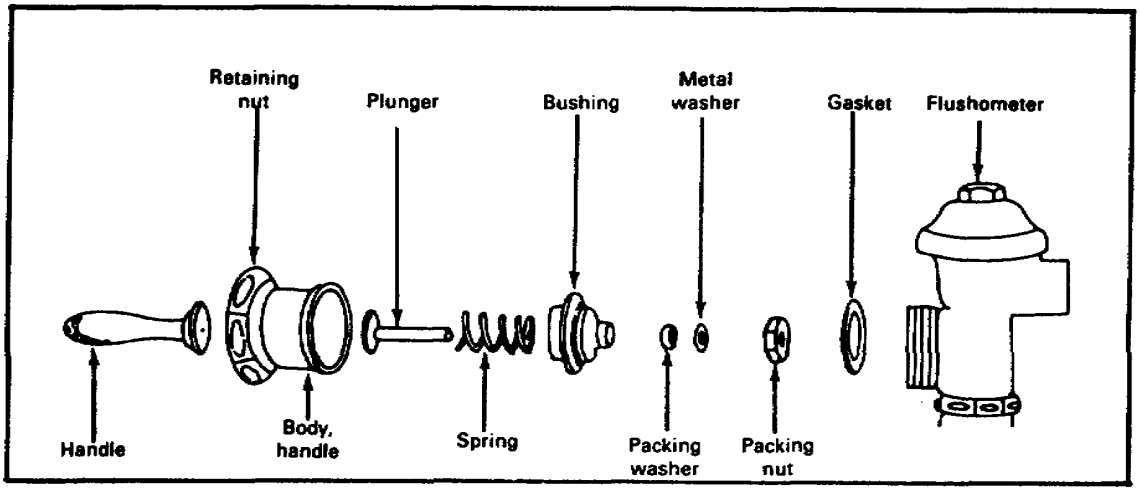

FLUSHOMETER VALVE HANDLE MALFUNCTIONS AND REPAIRS

Malfunction	Repairs
1. Water leak at handle.	a. Turn off water supply. b. Unscrew retaining nut. c. Pull out the handle body which contains all parts up to the packing nuts. d. Grip the handle body with a wrench and with another wrench unscrew the packing nut. e. Remove the worn packing washer. f. Install a new packing washer. g. Reassemble all parts. h. Turn on water supply. i. Check handle for leaks and proper operation.

FLUSHOMETER VALVE HANDLE MALFUNCTIONS AND REPAIRS (Continued)

2. Loose and wobbly handle.	**a. Turn off water supply.**
	b. Unscrew retaining nut.
NOTE: Can also cause leak at the handle.	**c. Pull out handle body which contains all parts up to the packing nut.**
	d. Grip the handle body with a wrench and with another wrench unscrew the packing nut.
	e. Grip the handle body with a wrench and unscrew the bushing with lock-grip pliers.
	f. Remove worn bushing, spring, or plunger.
	g. Replace worn part or parts with new ones.
	h. Reassemble all parts.
	i. Turn on water supply.
	j. Check handle for leaks and proper operation.

SELF-CHECK EXERCISE
Solutions are on page 30.

1. What part would you replace if the flushometer will not stop flushing? (See illustration.)

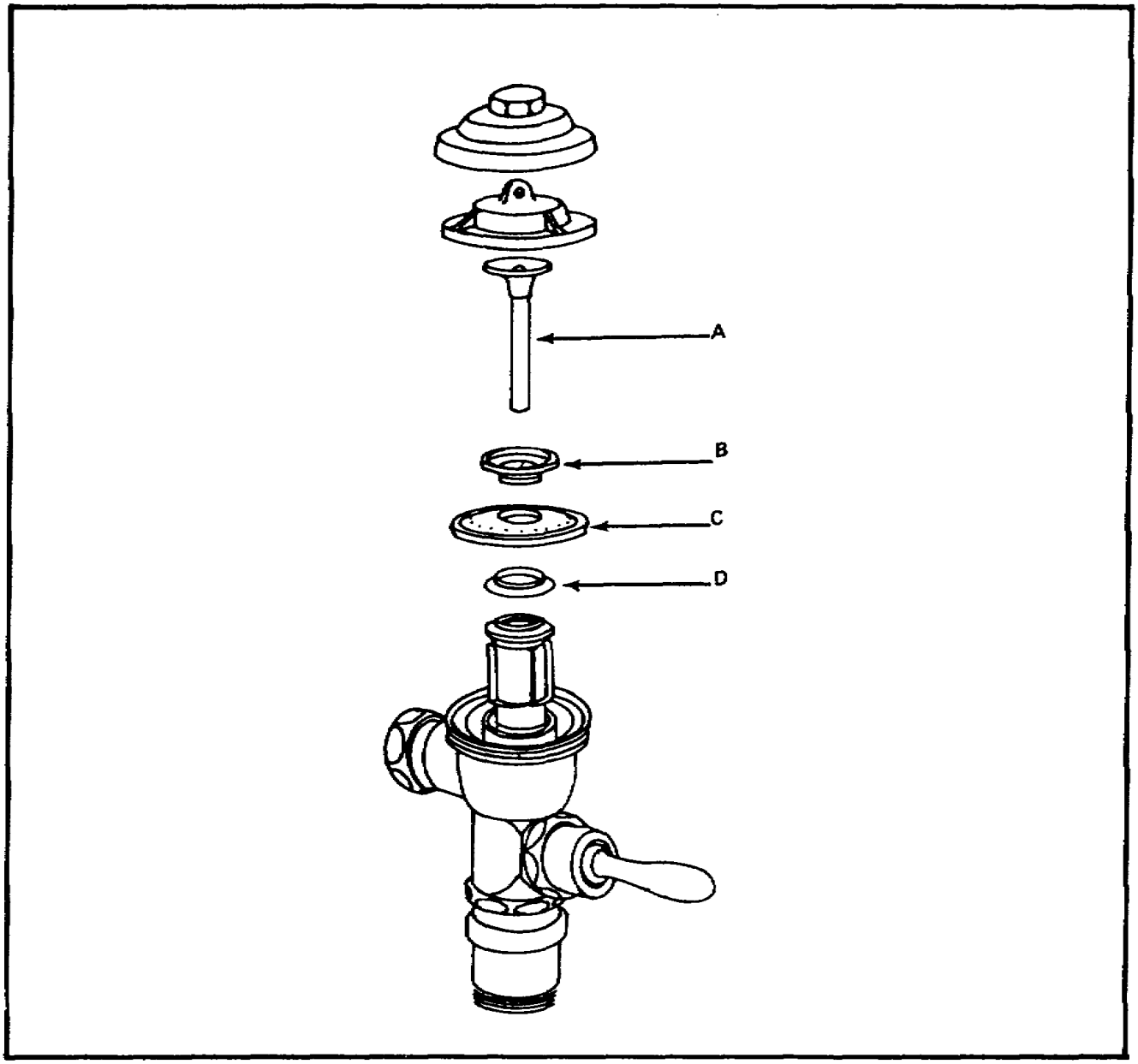

Lesson 1/Review Exercise

2. What part would you replace if the flushometer does not flush? (See illustration.)

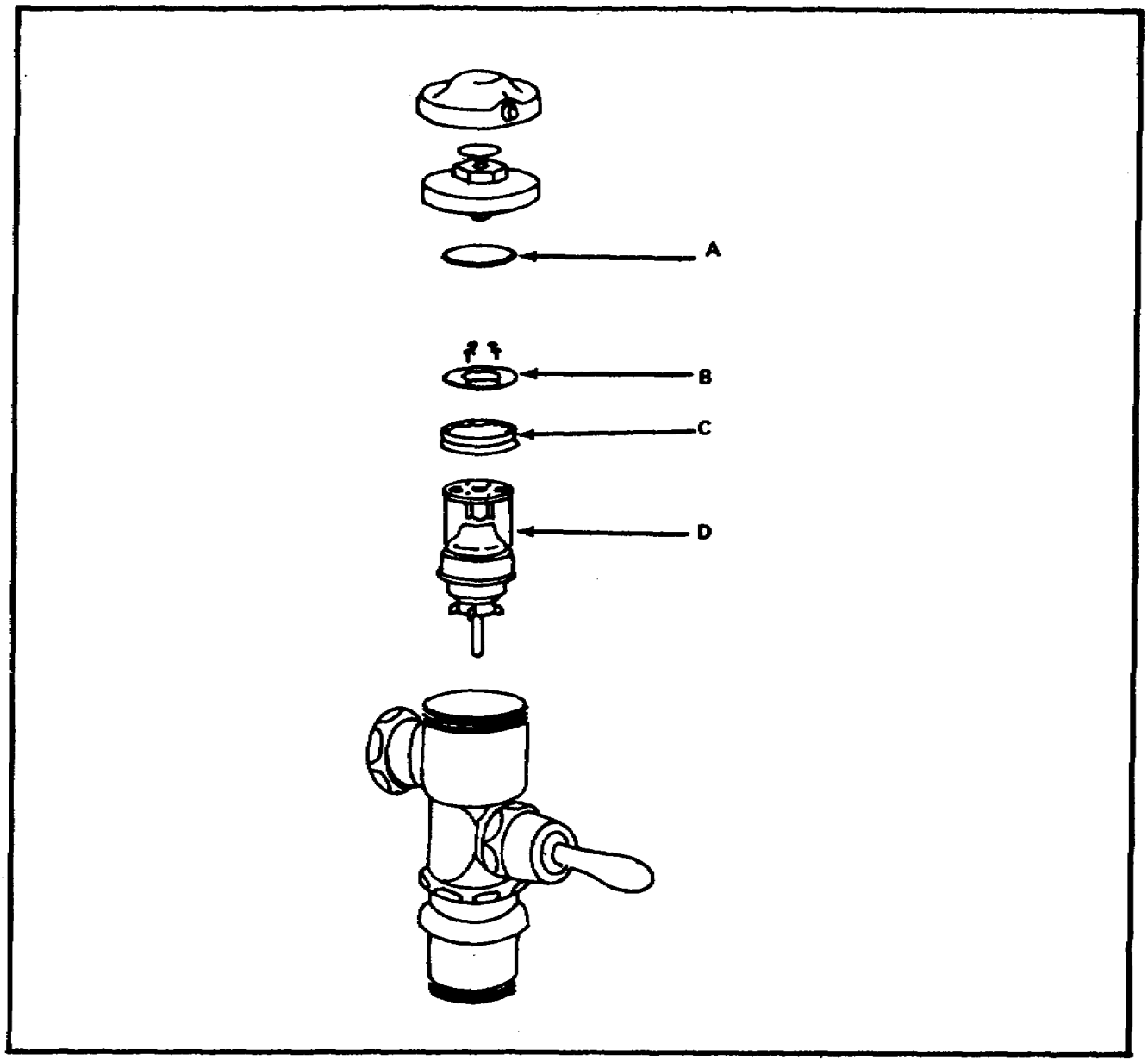

3. What part would you replace if the handle is firm but has a water leak? (See illustration.)

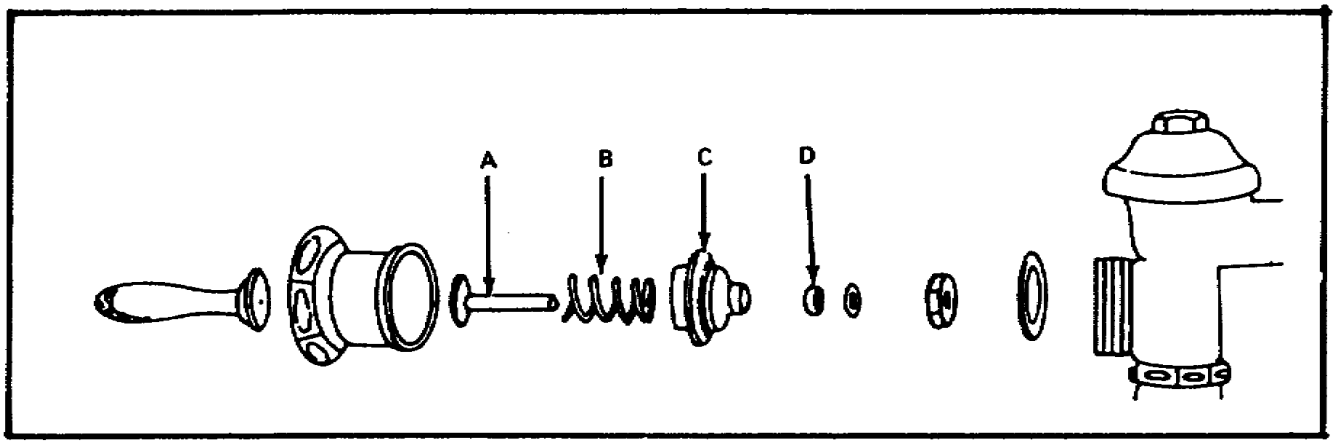

Lesson 1
REVIEW EXERCISE

Check your understanding of Lesson by completing these review exercises. Try to complete all of the exercises without looking back at the lesson. When you are finished, turn to the solutions at the end of the lesson and check your responses. If you missed any, go back and restudy the place in the lesson where the information is given. Fill in blanks with your responses.
Solutions are on page 38.

1. Identify each type of valve by name.
   A. _____
   B. _____

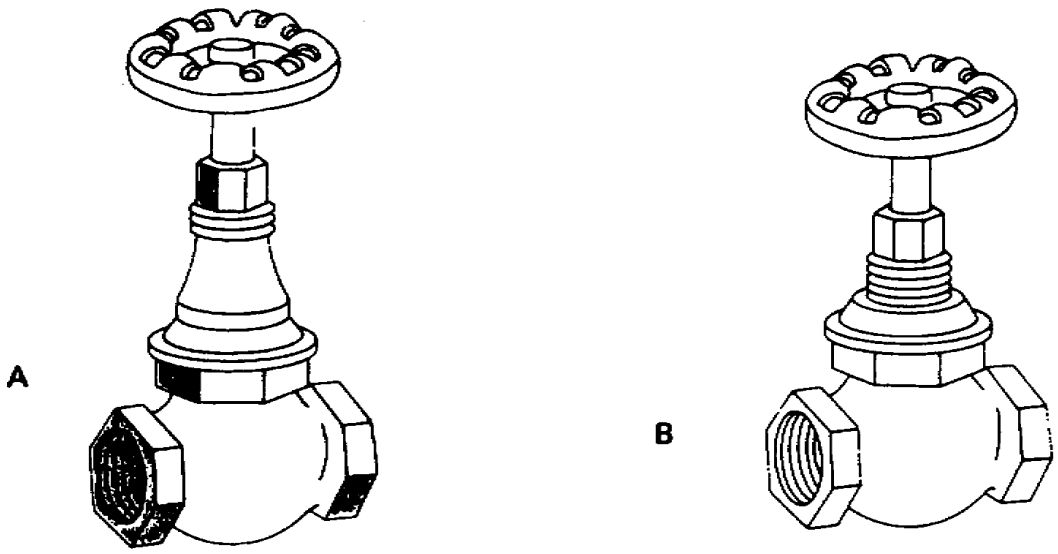

2. A gate valve is used to _____ the flow of water.

3. A globe valve is used to _____ the flow of water.

SELF-CHECK EXERCISE SOLUTIONS

1. C. Diaphragm
2. C. Rubber cup
3. D. Packing washer

4. Identify each type of faucet by name.

A. _____
B. _____

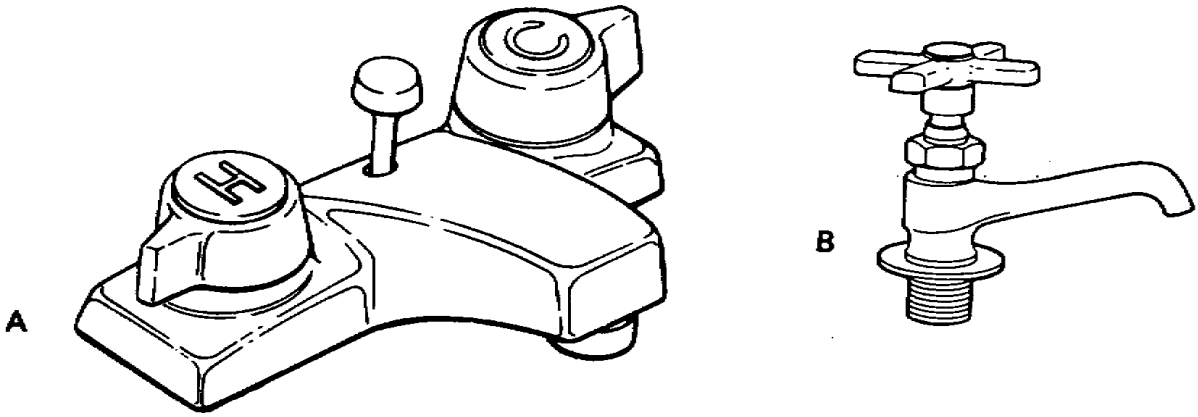

5. The gate valve is leaking at point A. What part requires replacement to stop the leak? _____ .

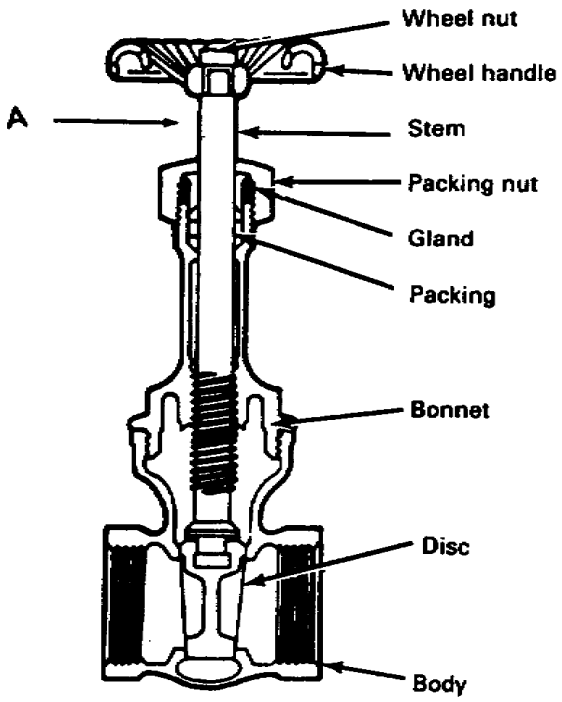

6. The globe valve is leaking at point X. What part requires replacement to stop the leak? _____.

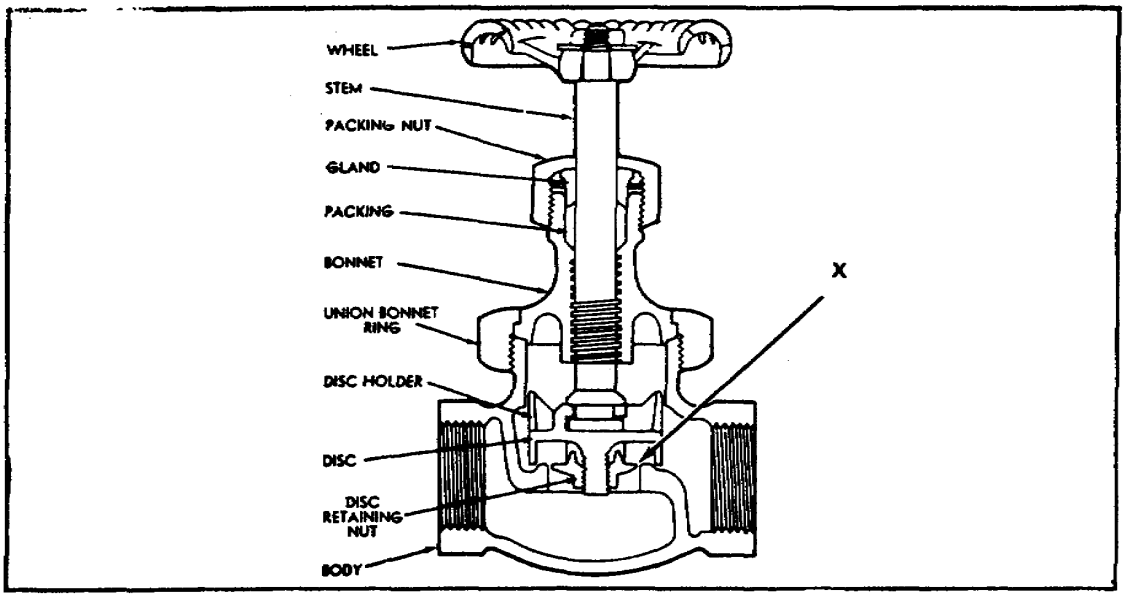

7. The single faucet, plain bibb, is leaking at the stem. What part requires replacement? _____.

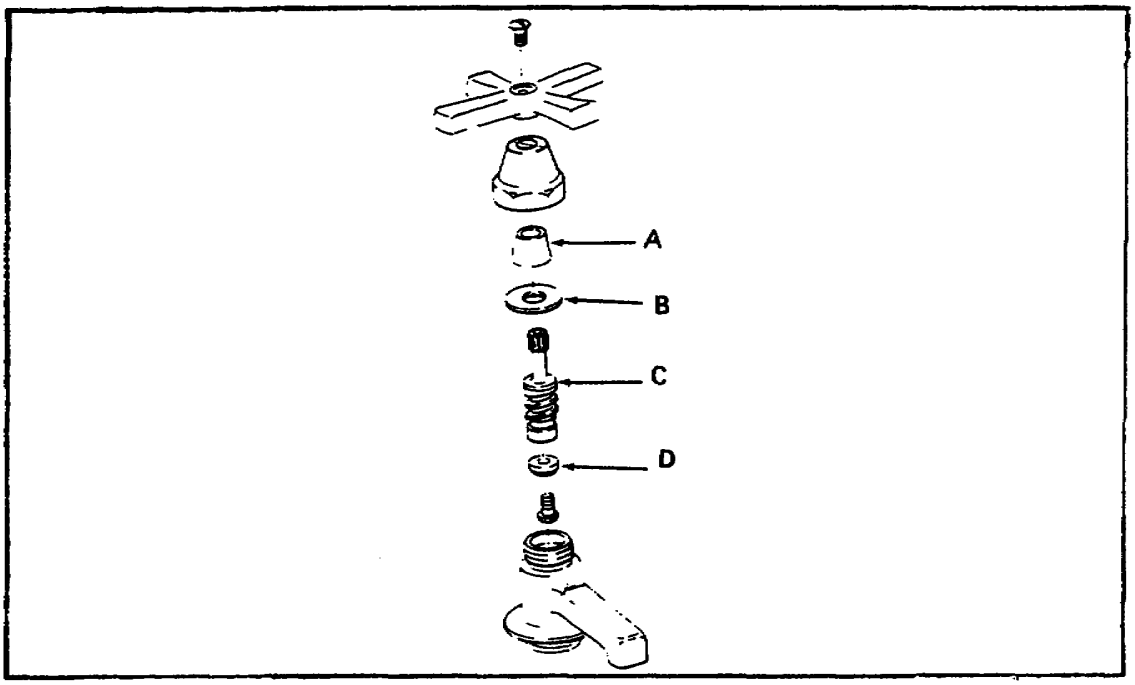

8. The combination faucet is leaking at the base of the body. What part requires replacement? _____.

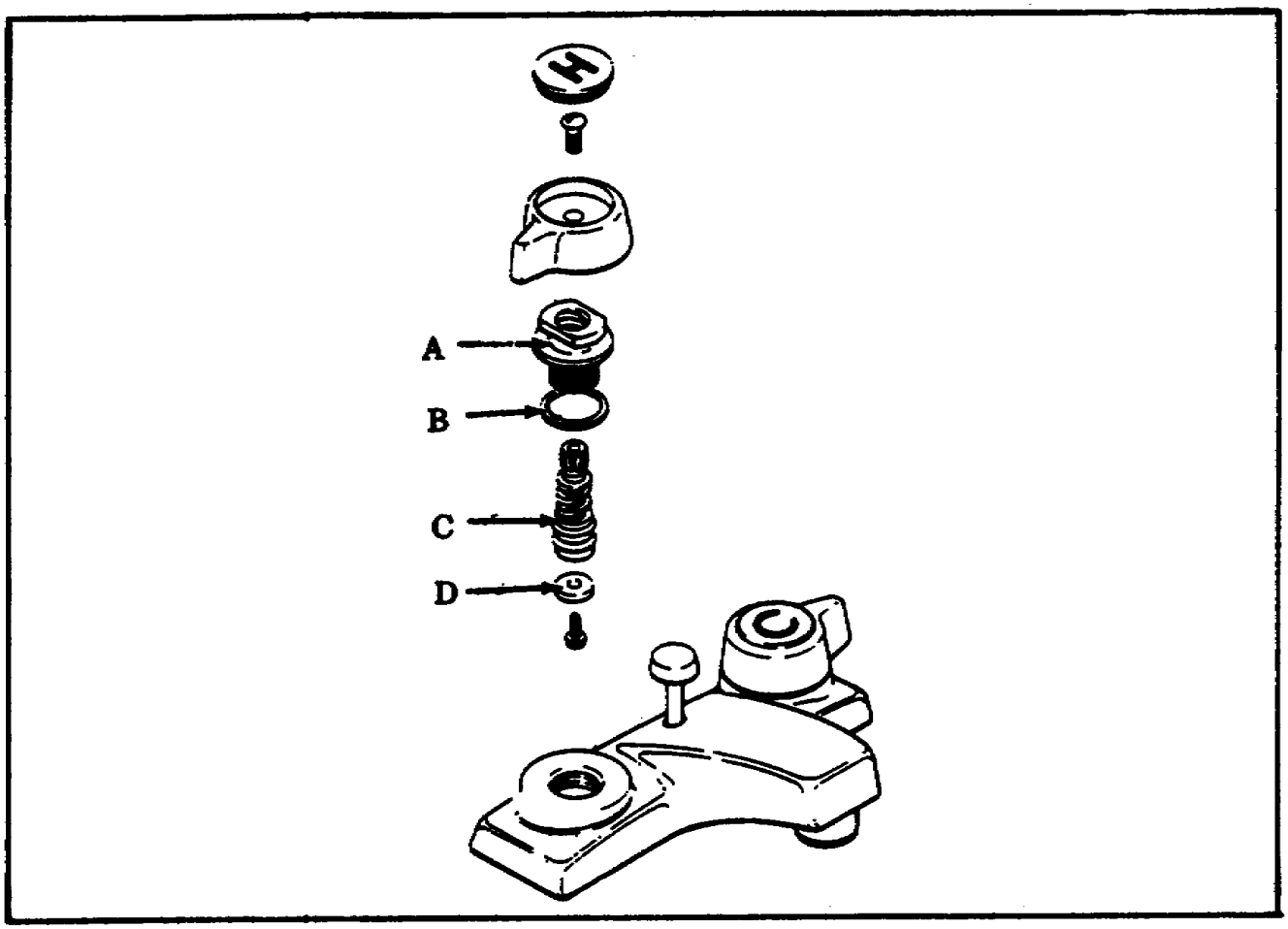

9. The single lever combination faucet valve type, is leaking at the spout. What part requires replacement? _____.

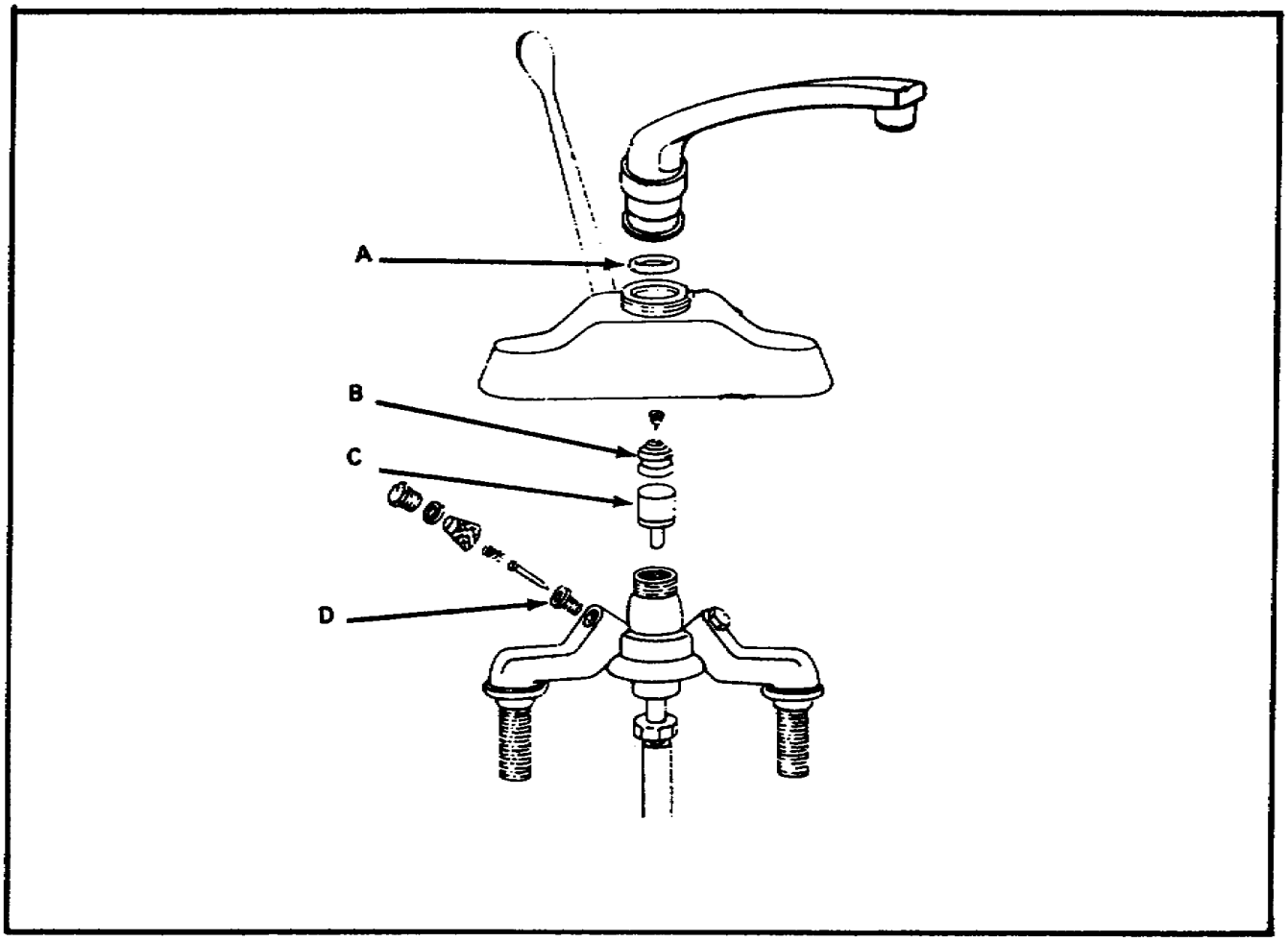

10. The diaphragm type flushometer valve will not flush a water close. What part requires replacement? _____.

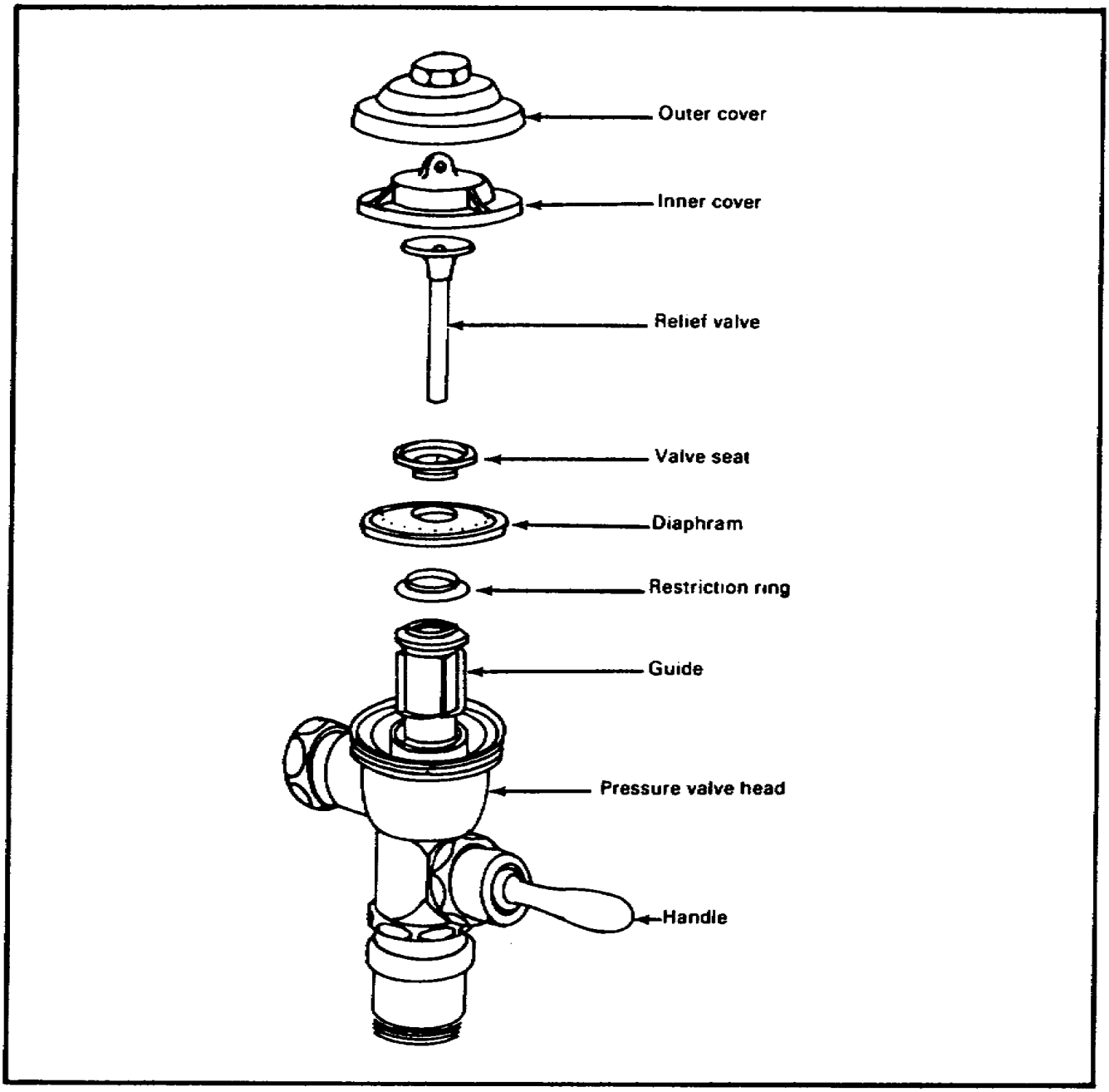

11. The piston type flushometer valve will not stop flushing a urinal. What part requires replacement? _____.

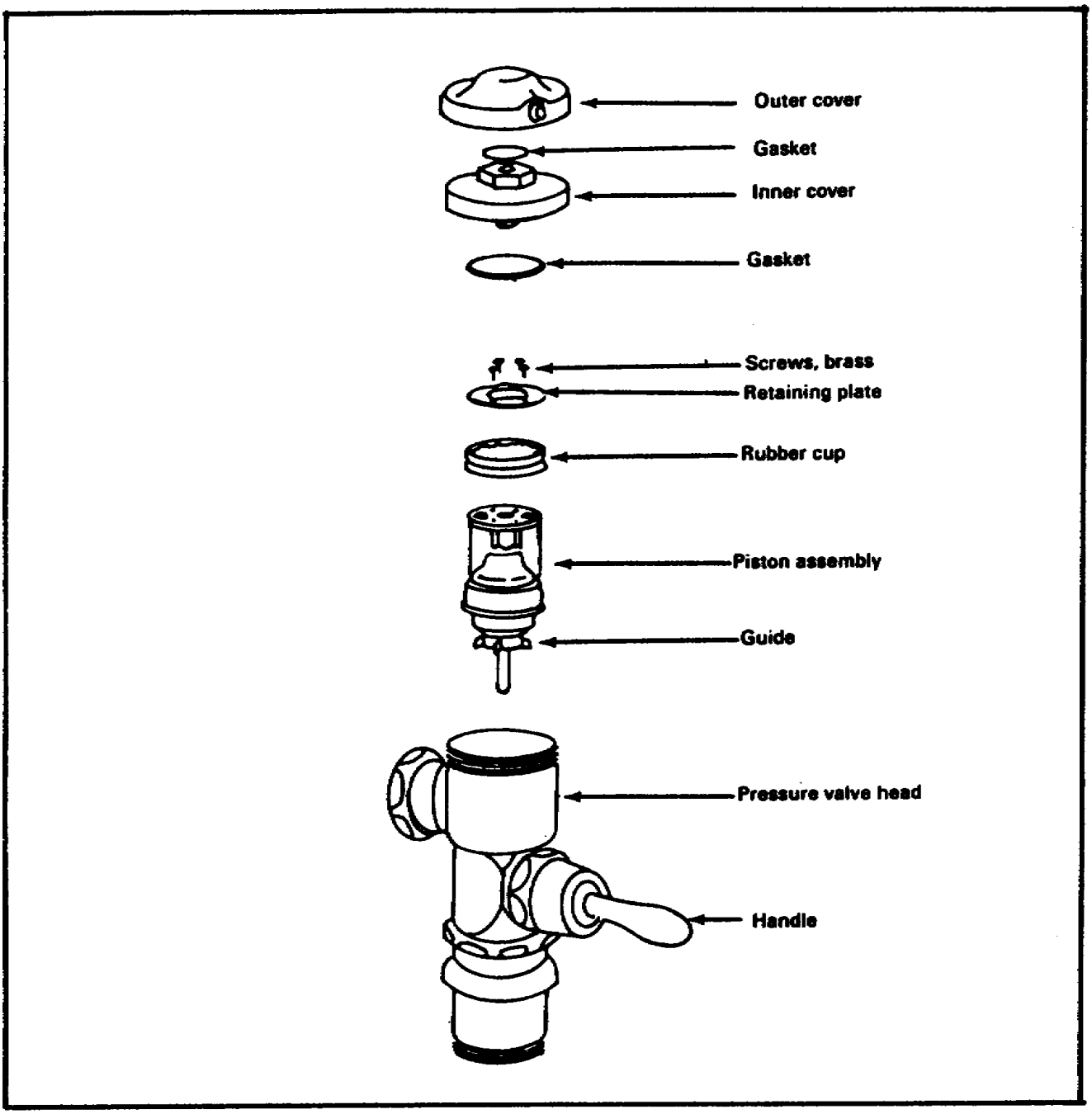

12. The diaphragm type flushometer for a water closet is leaking at the handle. What part requires replacement? _____.

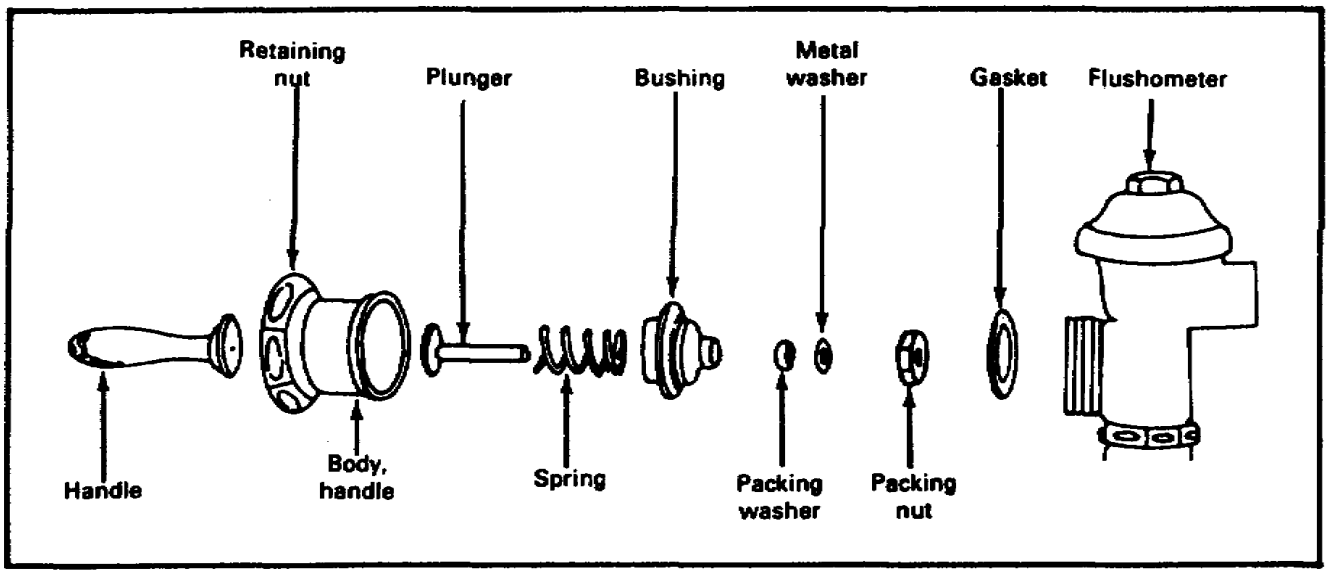

Lesson 2
MAINTENANCE OF FIXTURE CONTROL DEVICES

Objective
At the end of this lesson, you will be able to describe the procedures used to repair fixture control devices.

Task
051-248-1011, Repair valves and fixture control devices.

Condition
You will be given subcourse booklet EN5114 and an examination response sheet. You will work at your own pace and in your own selected environment without supervision.

Standards
Within approximately 3 hours, you should be able to study the lesson resources, answer the review exercises, and select the correct response for each examination question. You must respond correctly to 70 percent of the examination questions in order to receive credit for this subcourse.

Credit Hours
3

References
FM 5-51K 1/2
TM 5-551K

REVIEW EXERCISE SOLUTIONS

1. A. Gate
   B. Globe
2. Shut off
3. Control and/or regulate
4. A. Combination
   B. Single, with plain bibb
5. Packing
6. Disc
7. A. Packing
8. B. Washer
9. A. O-ring
10. Diaphragm
11. Rubber cup
12. Packing washer

Learning Event 1:
REPAIRING FLUSHING MECHANISMS

Fixture control devices are used for flushing, holding water in a lavatory bowl, and draining waste. These devices-such as a water closet's tank flushing mechanism or lavatory/sink popup plug-get much usage and wear. When a fixture control device fails to operate properly or leaks, the malfunction is located and repaired. See figures 20 through 22 on pages 39 through 42.

FIGURE 20. BALLCOCK-TYPE FLUSHING MECHANISM

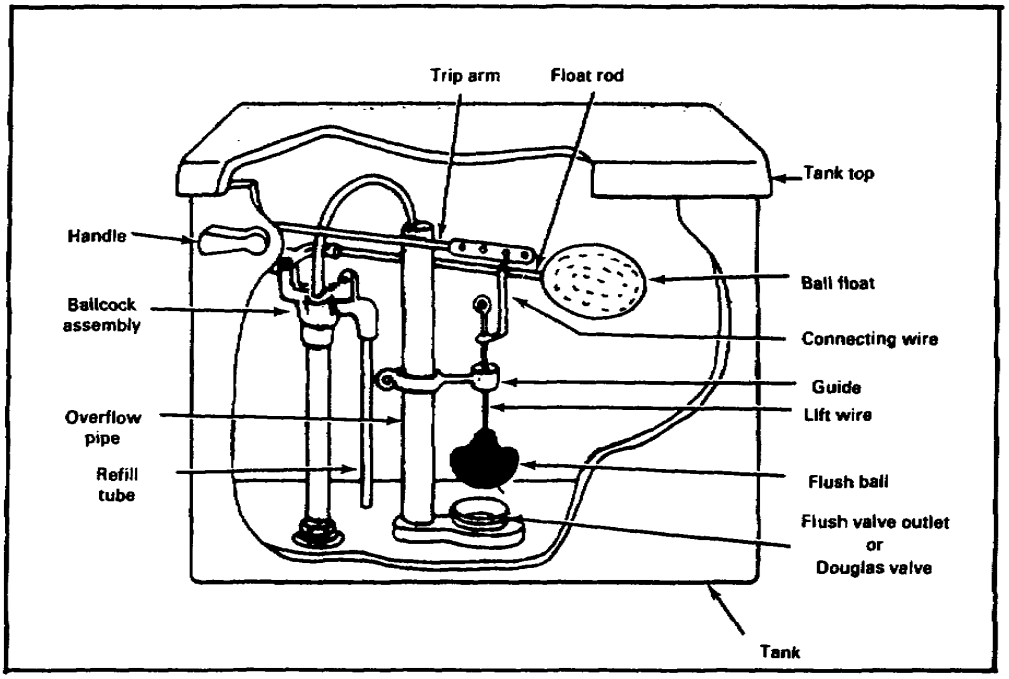

WATER CLOSET'S BALLCOCK TYPE FLUSHING MECHANISM MALFUNCTIONS AND REPAIRS

Malfunction	Repairs
1. Water level running into top of overflow pipe.	a. Remove tank top.
	b. Unscrew ball float from rod.
	c. Shake ball float to find out if any water is in the ball.
	d. If water is inside the ball, replace the ball float. If no water is in the ball, the ball float is functional.

WATER CLOSET'S BALLCOCK-TYPE FLUSHING MECHANISM
MALFUNCTIONS AND REPAIRS (Continued)

	e. Screw ball float back onto the rod.
	f. Place both hands on the middle of the float rod and carefully bend the ball side of the rod down about ½ inch.
	g. Flush water closet to check that water level is below top of overflow pipe.
	h. Replace tank top.
2. Running water closet caused by —	a. Remove tank top.
a. Damaged flush ball.	b. Turn off water supply at shutoff valve.
	c. Flush water closet to empty tank.
	d. Unscrew flush ball from lift wire.
	e. Check bottom of flush ball for damage or wear.
	f. If flush ball is damaged or worn, replace it with a new one.
	g. Clean flush valve outlet with emery cloth or steel wool.
	h. Operate handle several times to check that the flush ball sits evenly in the flush outlet valve.
	i. Turn on water supply.
	j. Flush water closet to check repair.
	k. Replace tank top.

WATER CLOSET'S BALLCOCK-TYPE FLUSHING MECHANISM MALFUNCTIONS AND REPAIRS (Continued)

b. Damaged Washer.

a. Turn off water supply shutoff valve.

b. Flush water closet to empty water from tank.

c. Remove screws or pins.

d. Lift plunger out of assembly.

e. Check both washers for damage or wear.

f. Replace worn or damaged washer.

g. Reassemble ballcock assembly.

h. Turn on water supply.

i. Flush water closet several times to check repair.

j. Replace tank top.

FIGURE 21. BALLCOCK PARTS

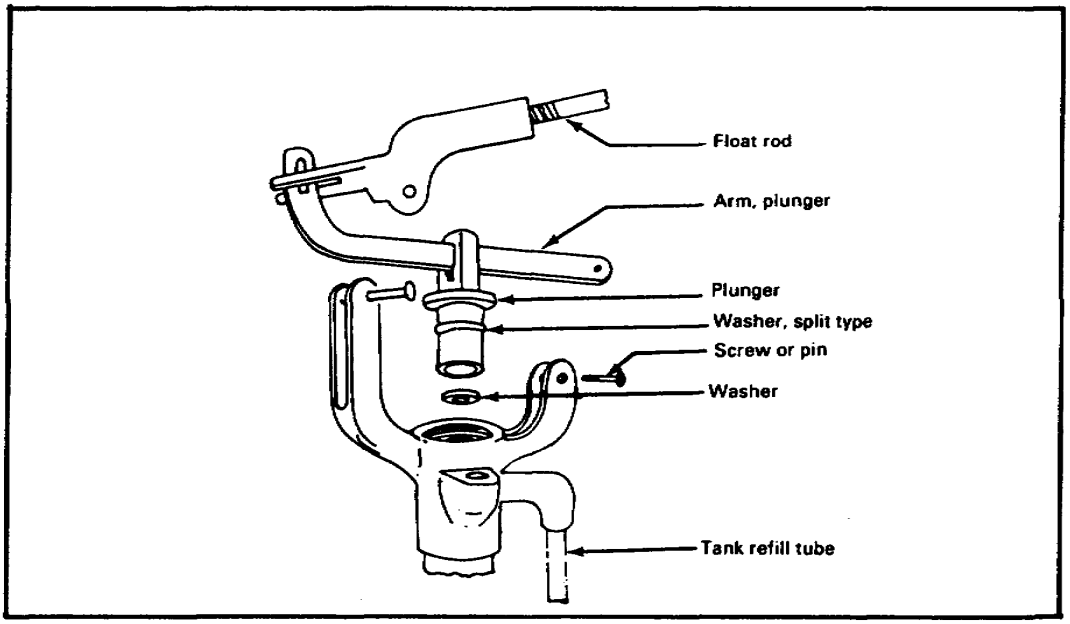

FIGURE 22. FLOAT-CUP-TYPE FLUSHING MECHANISM

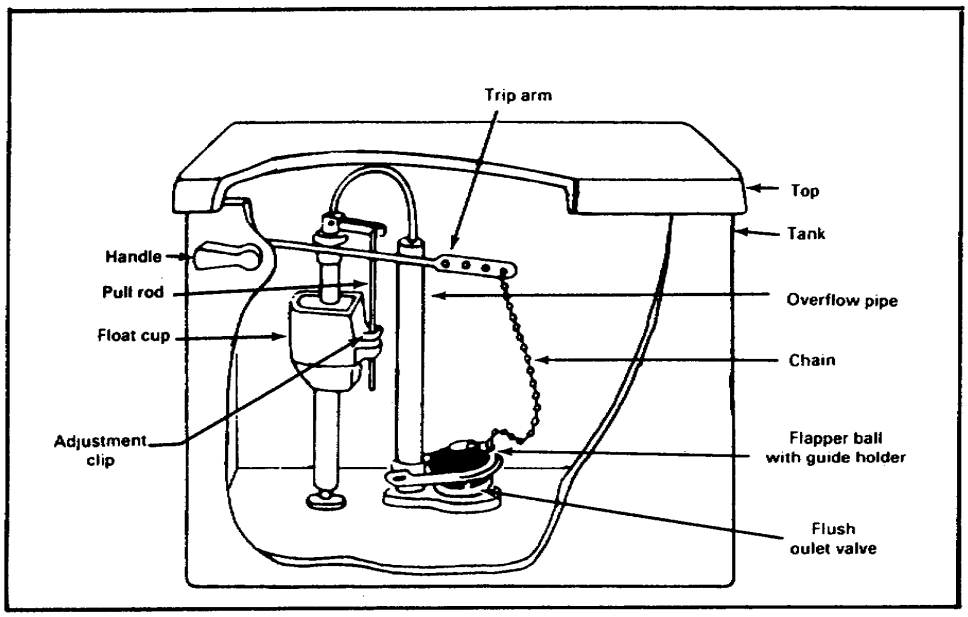

FLOAT-CUP-TYPE FLUSHING MECHANISM MALFUNCTIONS AND REPAIRS

Malfunction	Repairs
1. Water level running into top of overflow pipe.	a. Remove tank top. b. Grab the top and bottom of the adjustment clip, squeeze, and move it down on the pull rod to lower the float cup. c. Flush tank and check incoming water level. Level should be about one inch below top of overflow pipe. d. If level is not correct, repeat steps b and c above. Replace tank top.
2. Running water closet.	a. Remove tank top. b. Turn off water supply at shutoff valve. c. Flush water closet to empty tank. d. Lift up flapper ball and check for damage or wear.

FLOAT-CUP-TYPE FLUSHING MECHANISM MALFUNCTIONS AND REPAIRS (Continued)

e. If flapper ball is damaged or worn, replace it.

f. Clean outlet valve with emery cloth or steel wool.

g. Operate handle several times to check that flapper ball sits evenly in the outlet valve.

h. Turn on water supply.

i. Flush water closet to check repair.

j. Replace tank top.

SELF-CHECK EXERCISE

Solutions are on page 44.

1. A ballcock flushing mechanism has water running into the top of the overflow pipe. What part of the flushing mechanism would you check first?
   A. Flush ball
   B. Float rod
   C. Trip arm
   D. Ball float
2. You determine that the ballcock assembly is causing a running water closet. What part would you replace?
   A. Plunger
   B. Plunger arm
   C. Washer
   D. Screw or pin

Fill in the blanks with your responses.

3. Water is running into the top of the overflow pipe. The float cup is moved _____ on the pull rod to lower the water level.
4. A water closet with a float cup flushing mechanism is running. The _____ must be replaced.

Learning Event 2:
REPAIRING CONTROL DEVICES

Control devices that can malfunction in a lavatory are the pop-up plug and the pivot ball connection. When the plug does not hold water in the bowl and the pivot ball connection leaks, the malfunction must be located and repaired. See figures 23 through 25 on pages 44 through 46.

NOTE: Many companies manufacture a popup type mechanism for lavatories. The working parts are generally the same, so malfunctions and repairs will be basically the same. A typical pop-up plug mechanism is shown here.

FIGURE 23. POP-UP PLUG MECHANISM

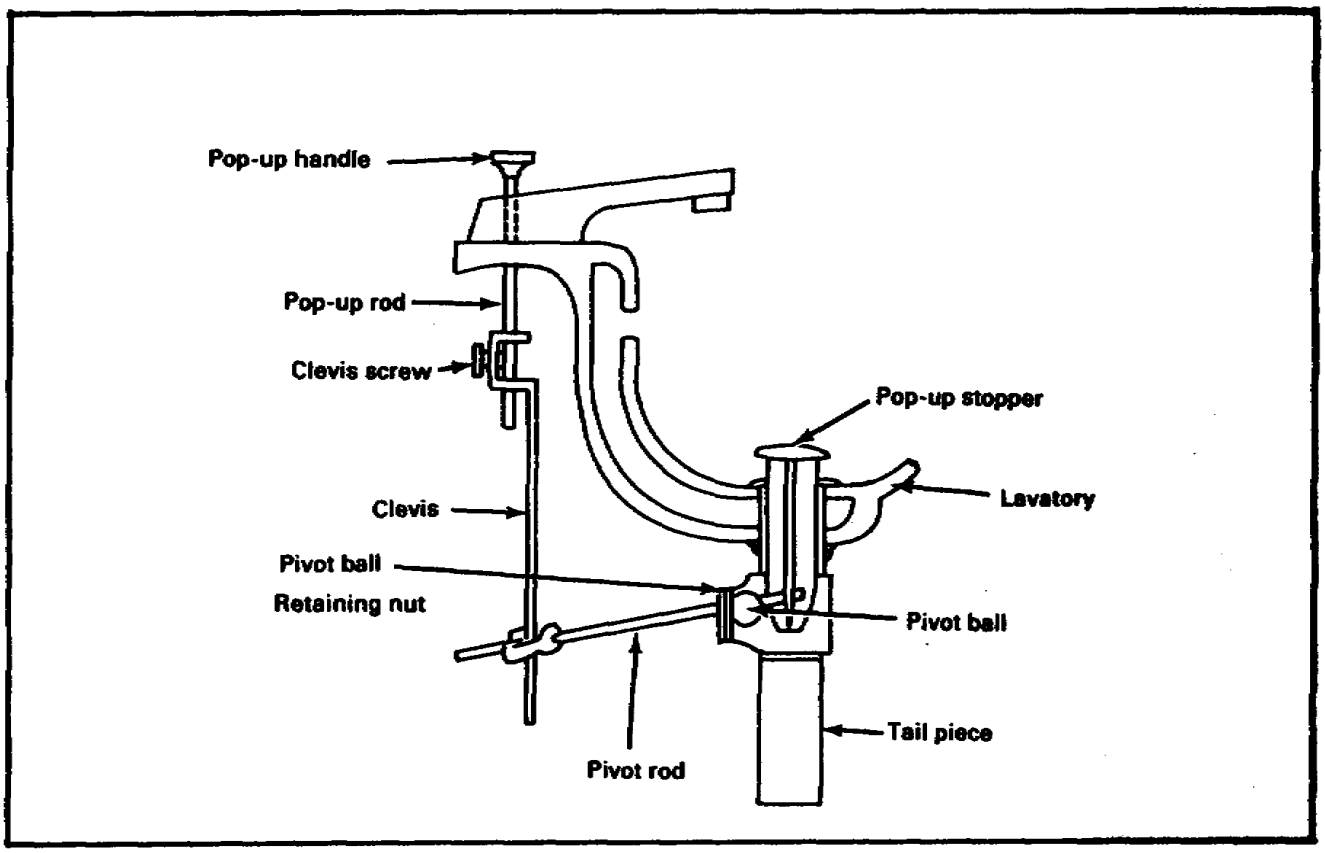

SELF-CHECK EXERCISE SOLUTIONS

1. D. Ball float
2. C. Washer
3. Down
4. Flapper ball

FIGURE 24. POP-UP PLUG PARTS

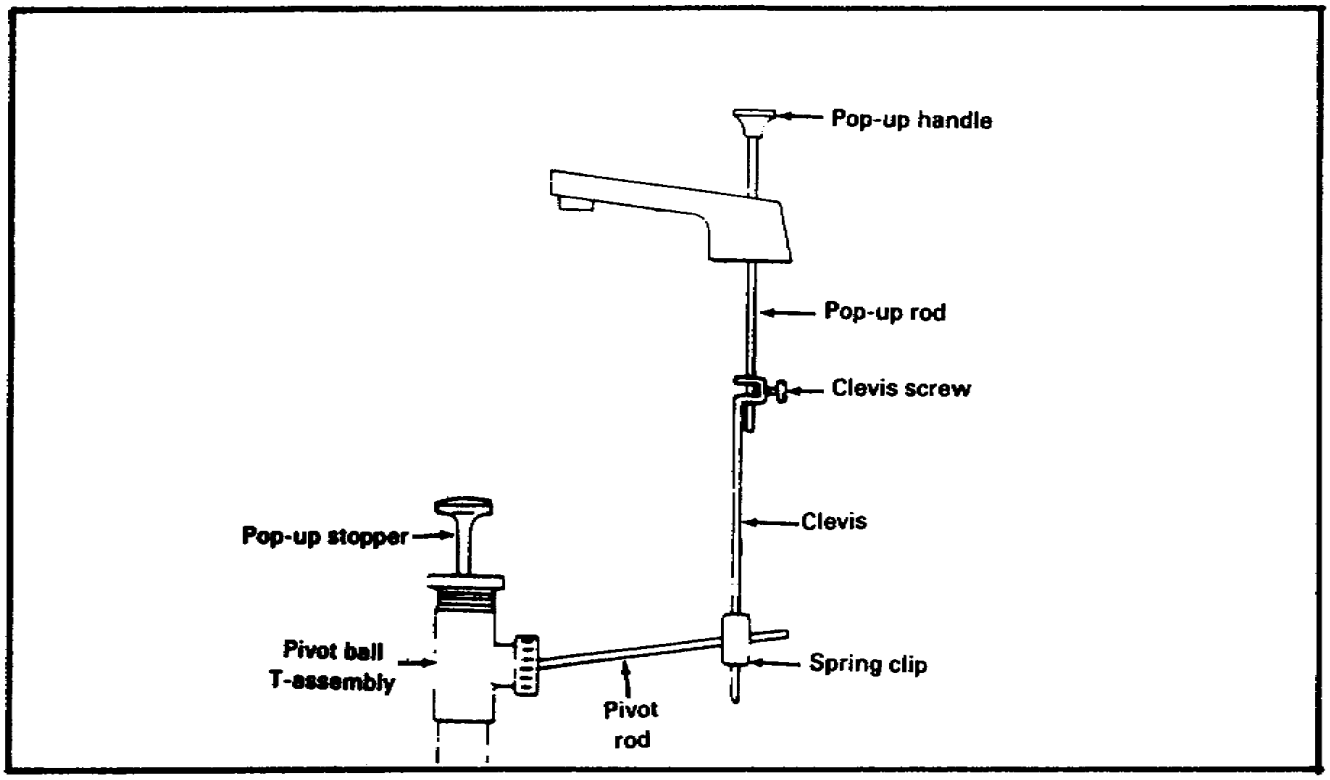

STOPPER FAILS TO KEEP WATER IN LAVATORY'S BOWL

Malfunction	Repairs
Stopper fails to keep water in bowl.	a. Loosen clevis screw with pliers.
	b. Push pop-up stopper down so it sits snugly on flange.
	c. Tighten clevis screw and check to make sure it fits snugly on flange.
	If the stopper does not operate as easily as it should, this can be corrected as follows:
	a. Squeeze spring clip and pull out the pivot rod from the clevis hole.
	b. Place the pivot rod through the next higher or lower hole in the clevis.
	c. Close stopper and fill bowl with water.
	d. Check water level to assure the stopper holds water in the bowl.

FIGURE 25. PIVOT BALL PARTS

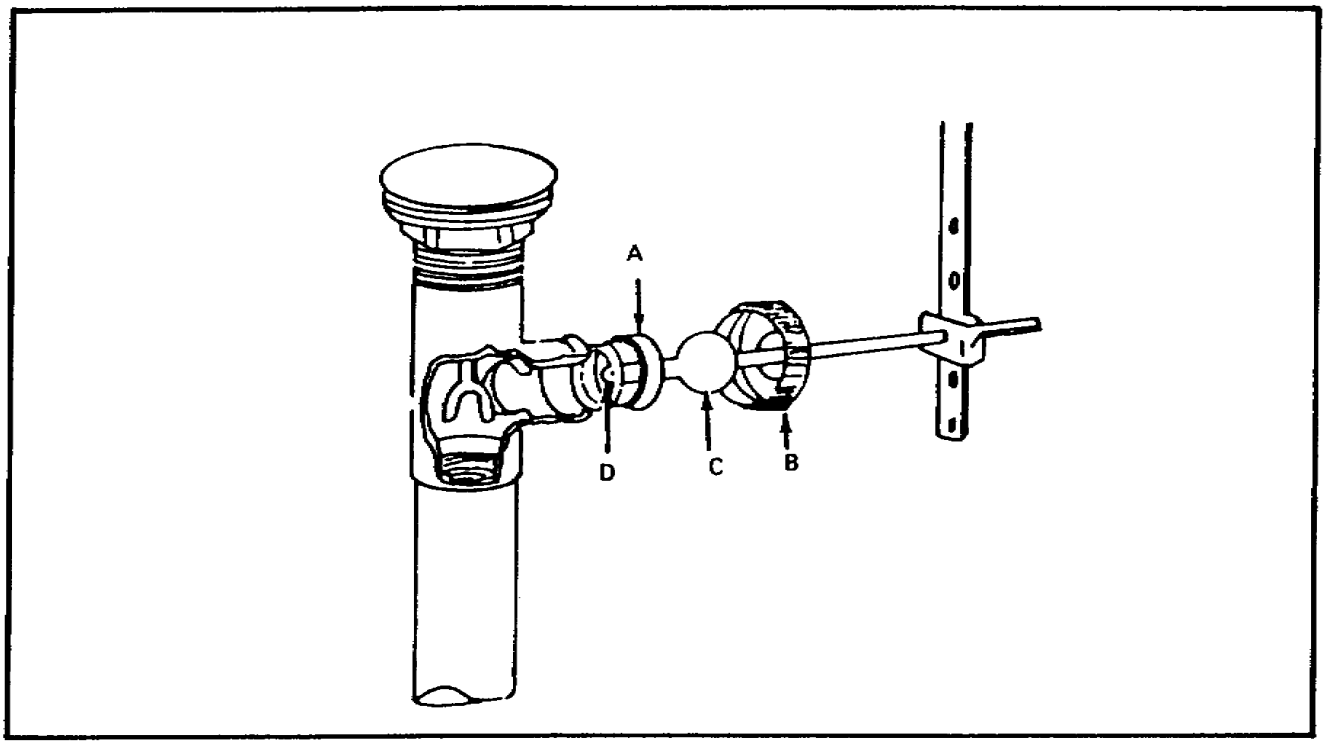

PIVOT BALL MECHANISM MALFUNCTIONS AND REPAIRS

Malfunction	Repairs
Leak at pivot ball connection.	a. Tighten pivot ball retaining nut. If leak continues, remove nut with pliers. b. Squeeze spring clip and slide the pivot rod out of the clevis hole. c. Slide pivot ball retaining nut and worn washers off the pivot rod. d. Slide new washers, plastic and rubber, and pivot ball nut onto pivot rod. e. Tighten pivot ball retaining nut. f. Reassemble pivot rod into clevis hole. g. Run water into lavatory and check the connection for leaks. NOTE: Always check that the pop-up stopper operates properly in holding water after a repair has been made on the pivot ball connection.

SELF-CHECK EXERCISE
Solutions are on page 52.

1. When a lavatory's pop-up mechanism fails to hold water in the bowl, at what two points is the repair made? (See illustration.)

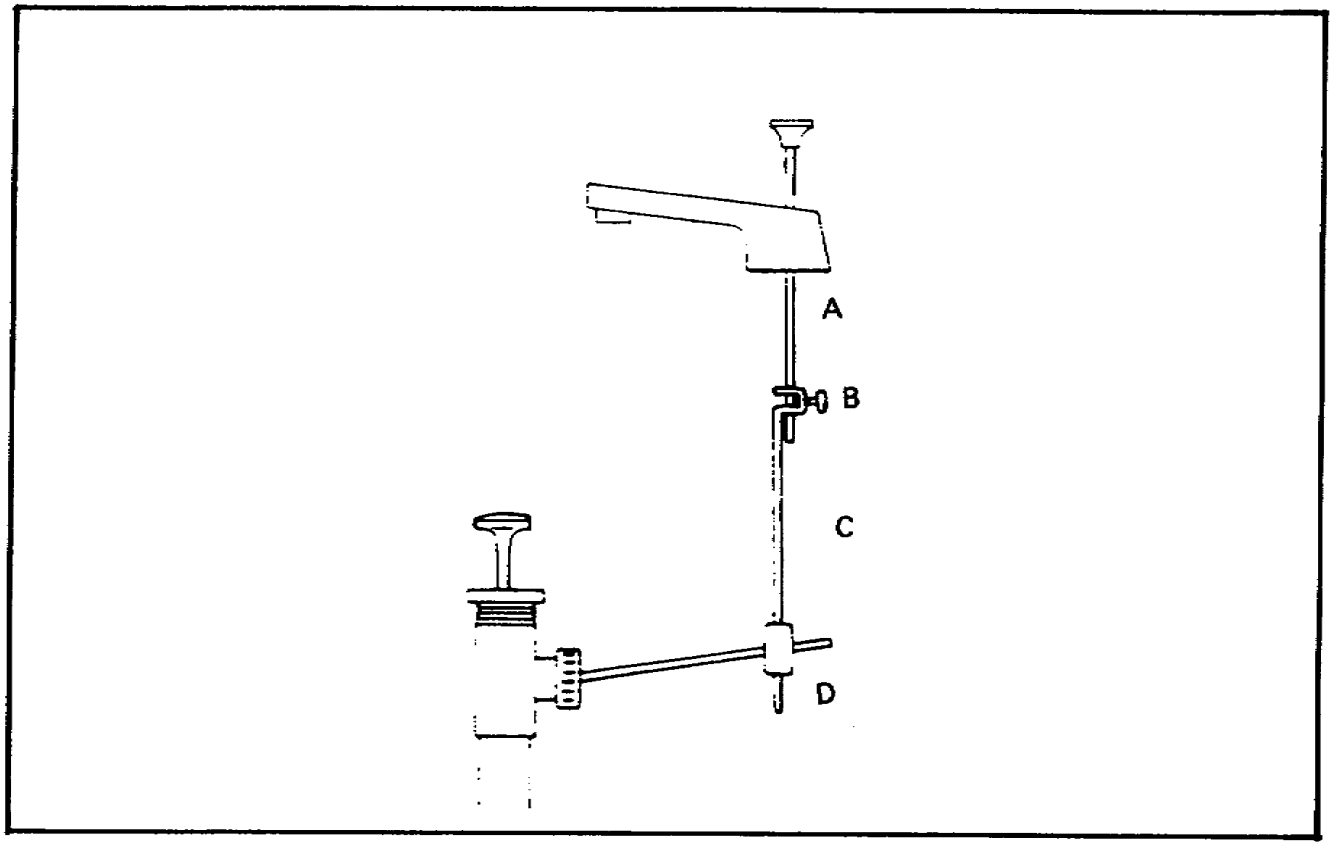

Lesson 2/Review Exercise

2. When a lavatory's pop-up mechanism is leaking at the retaining nut, what parts are replaced to make the repair? (See illustration.)

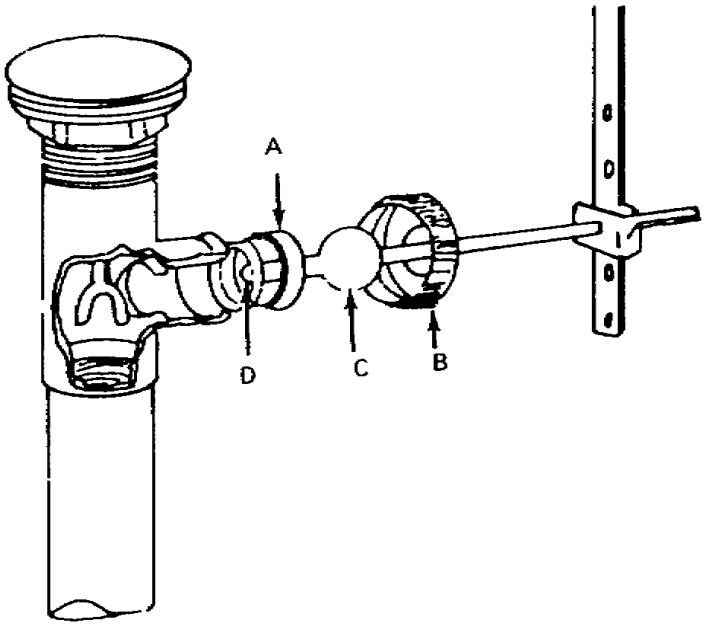

Lesson 2
REVIEW EXERCISE

Check your understanding of Lesson 2 by completing these review exercises. Try to complete all of the exercises without looking back at the lesson. When you are finished, turn to the solutions at the end of the lesson and check your responses. If you missed any, go back and restudy the place in the lesson where the information is given. For questions 1 and 2, use the illustration below. Fill in the blanks with your responses. Solutions are on page 52.

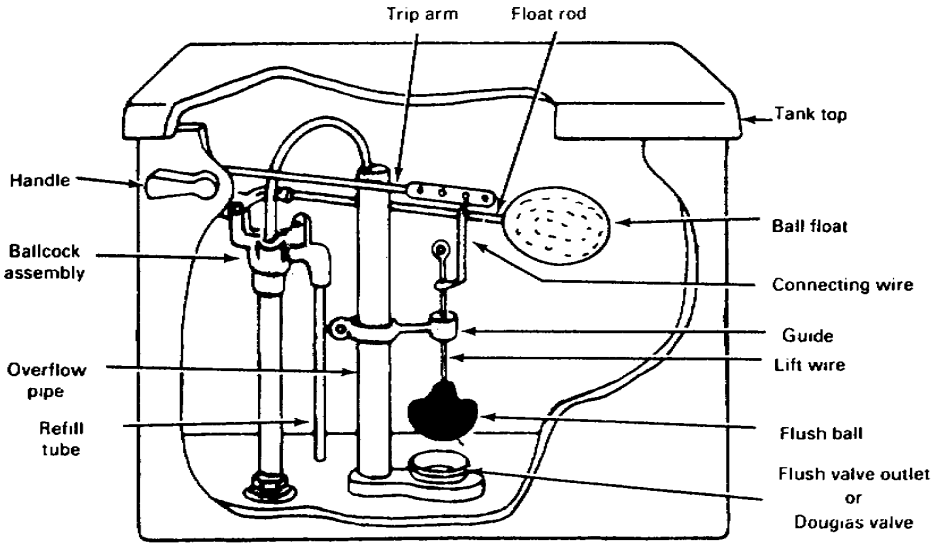

Lesson 2/Review Exercise

1. The water level is running into the top of the overflow pipe. What part would you remove and check to determine the cause? _____
2. When a water closet runs, what part must you replace? _____
3. A running water closet is caused by a malfunction in the ballcock assembly. Disassembling the ballcock you determine that two parts must be replaced. What are the two parts? _____

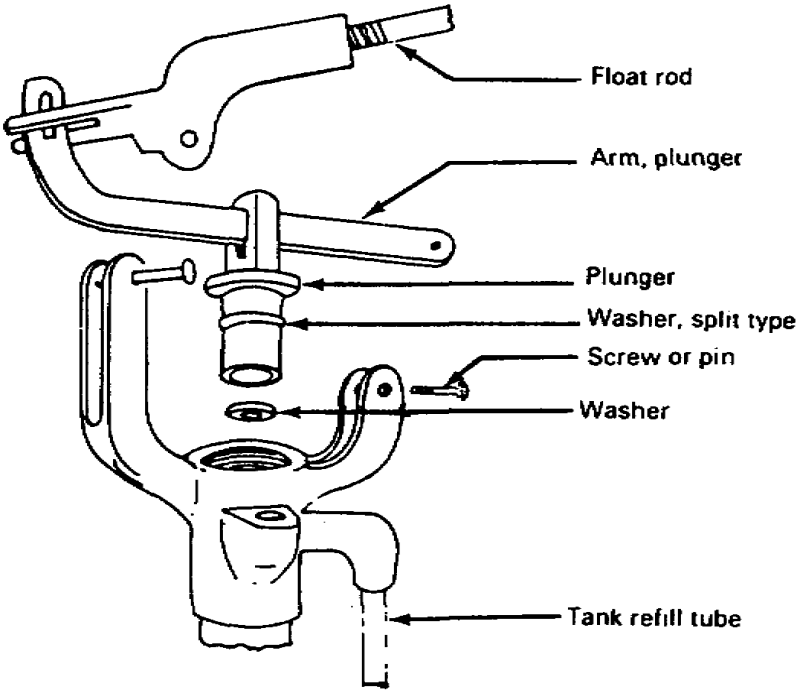

4. Water is running into the top of the overflow pipe in a water closet What part would you adjust to lower the water level? _____

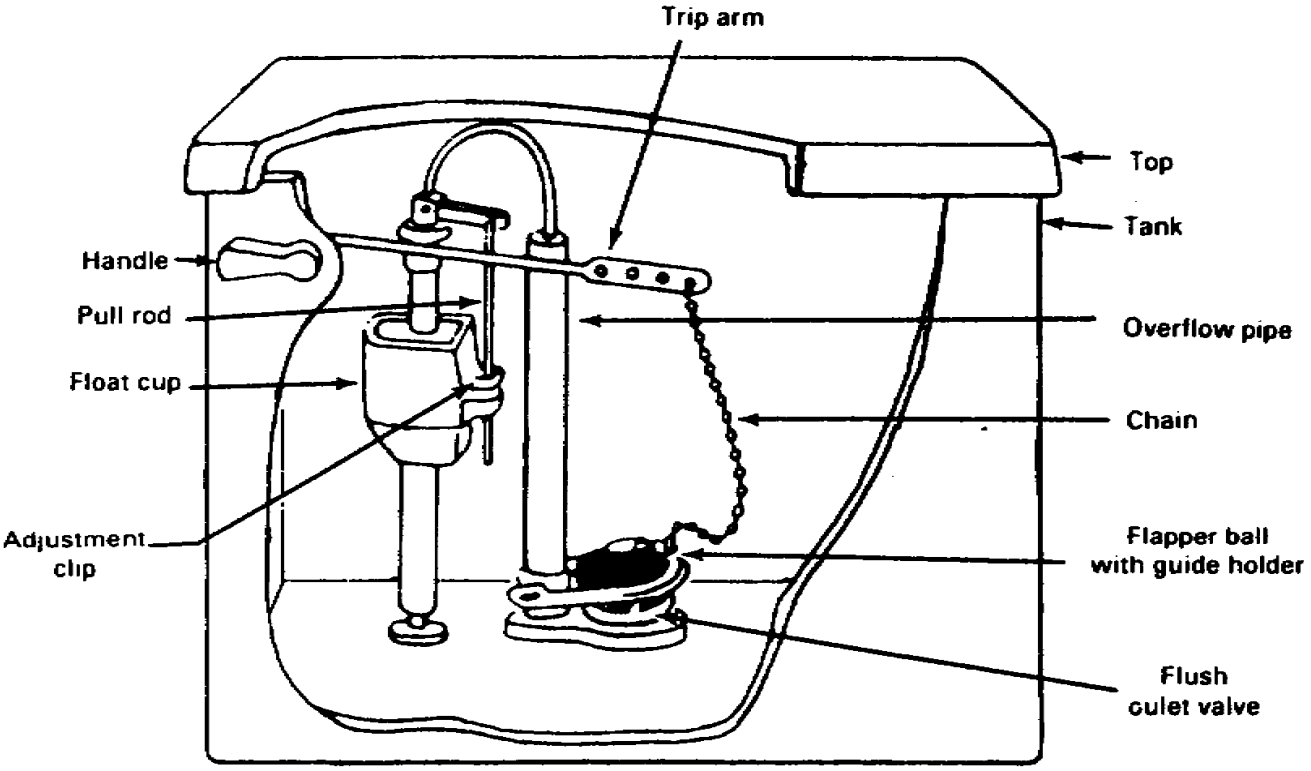

Lesson 2/Review Exercise

5. The pop-up stopper mechanism is leaking at the retaining nut. What two parts would you replace to repair the leak? _____

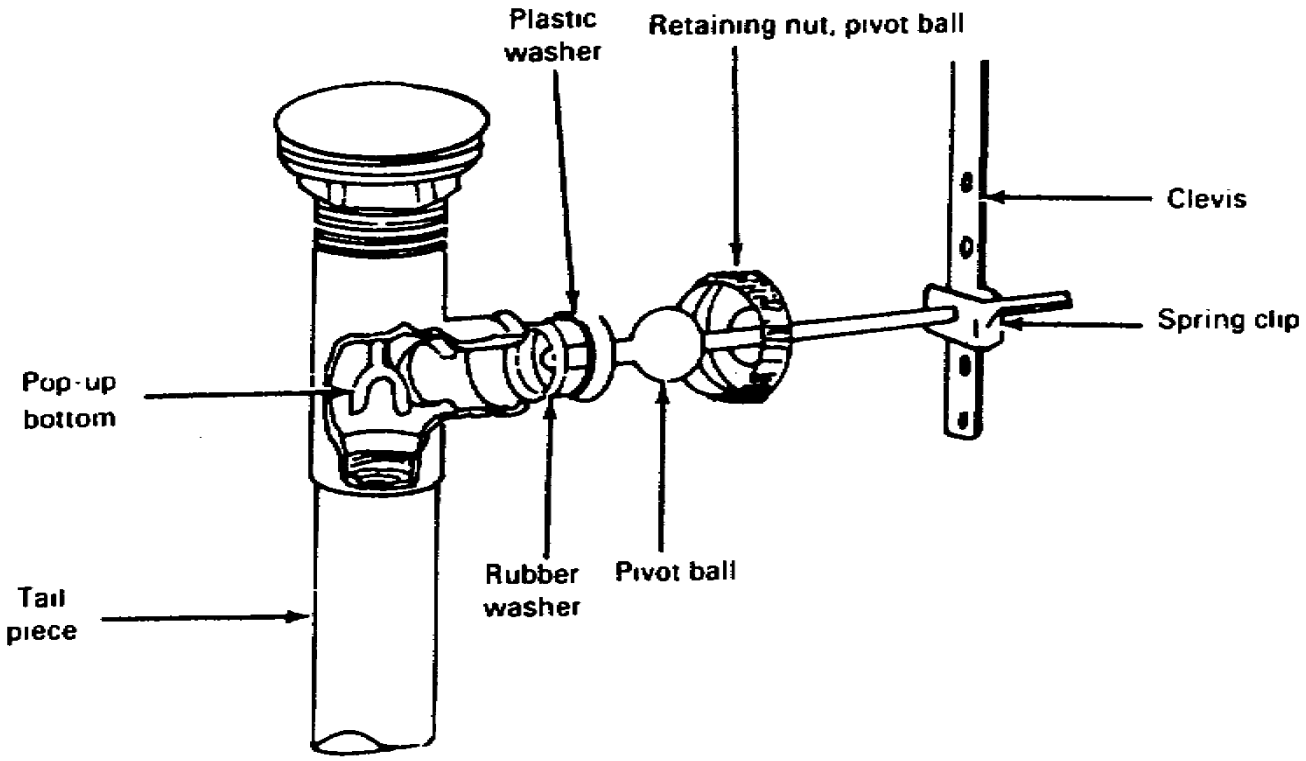

SELF-CHECK EXERCISE SOLUTIONS

1. B and D
2. A and D

REVIEW EXERCISE SOLUTIONS

1. Float ball
2. Flush ball
3. Split type washer and washer
4. Float cup
5. Rubber washer and plastic washer

U.S. GOVERNMENT PRINTING OFFICE: 2000-528-075/20460